WESMAR

WESMAR STAINLESS STEEL THRUSTERS

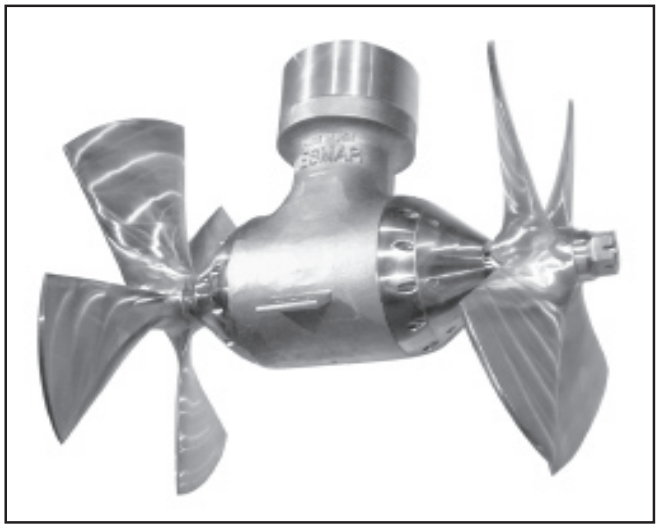

Counter-Rotating Dual 4-blade Stainless Steel Props Generate up to 40% More Thrust

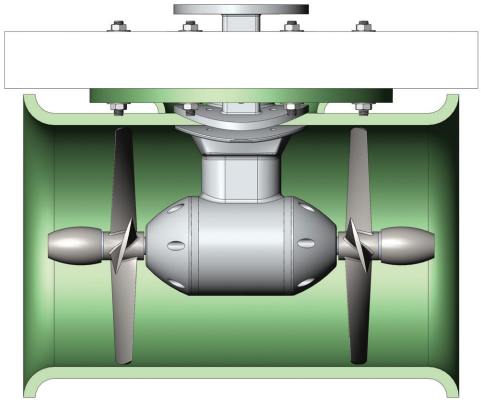

- Rugged low maintenance all stainless steel design
- Easy retrofits and upgrades - 5-500 HP
- More power with counter-rotating dual props

WESMAR THRUSTERS

Consider a thruster for your boat as two component parts, the drive, which consists of the gearbox and the props, the power source that is connected to the drive. Choosing the combination depends upon the size and characteristics of your vessel. WESMAR offers a variety of drive sizes that operate with both hydraulic or electric power sources. **Drop-in retrofits that replace Max Power, Vetus and Side-Power equipment are also available.**

The pages that follow include most of the off-the-shelf thruster systems WESMAR has available. Some important features are highlighted to the right. Keep in mind that we can manufacture practically any configuration needed for applications from 5 to 500 HP.

HYDRAULIC DRIVE THRUSTERS

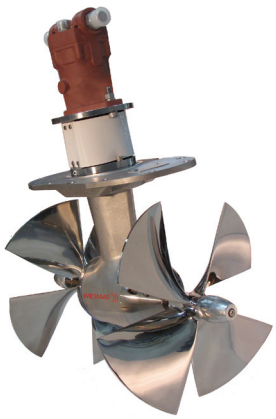

- Proportional valves for smooth operation
- Variety of tanks to fit space requirements
- Choice of sensing devices for efficiency
- Low maintenance

AC ELECTRIC REVERSIBLE MOTORS

- 25 TO 350 HP
- Frequency Drives
- Up to 5 fully proportional control stations
- Fast Maneuvering and docking

DC ELECTRIC PROPORTIONAL DRIVES

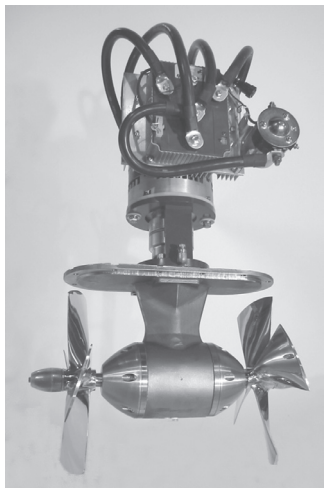

- Continuous operation & proportional control
- Up to 23 HP available
- Apply needed docking thrust without worry about thermal shutdown

Like Us On facebook

954-463-4307 • D.S. Hull Company, Inc. • www.dshullco.com

WESMAR

Like Us On facebook

WESMAR STAINLESS STEEL THRUSTERS

V2-7M-7 Inch No Saddle Bow & Stern Thrusters for Vessels 25-48 feet

Bow and stern thrusters come complete with hydraulic or electric motor, motor adapter, couplings, 2 Stainless steel - 4 blade Kaplan propellers, 2 zinc nut assemblies, 90Wt gear oil pre-filled in drive leg, owner's manual, mounting saddle, oil reservoir fill and breather vents.

Motor Choices

12 VDC 5 HP Electric
V2-7M SS Bow Thruster
Part #10.02007.1

24 VDC 13HP Electric
V2-7M SS Bow Thruster
Part #10.02007.2

Hydraulic 5-15HP
V2-7M SS Hyd Bow Thruster
Part #10.02007.4

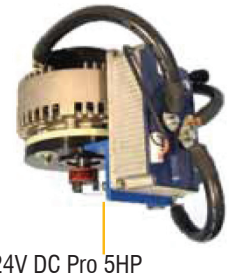

24V DC Pro 5HP
V2-7M SS DC Pro Bow Thruster
Part #10.02007.0

48V DC Pro 13 HP
V2-7M SS DC Pro Bow Thruster
Part #10.02007.5

Mounting Choices

Stern Thrusters

Bow Thrusters

WESMAR's dual prop, counter-rotating bow and stern thrusters bring more power, less noise and less vibration. The counter rotation splits the power between two matched sets of spiral beveled gears yielding very high propeller efficiency. The aft propeller recovers the swirl energy left behind by the forward propeller creating up to 40% more thrust than single prop thrusters, with the same input power. With more thrust, smaller tunnel diameters are possible, reducing drag, saving space and fuel.

1-800-437-1002 • D.S. Hull Company, inc. • www.dshullco.com

Prices and specifications subject to change without notice.

WESMAR

Dimensional Drawings of the V2-7M Thrusters

Like Us On facebook

V2-7M 24VDC

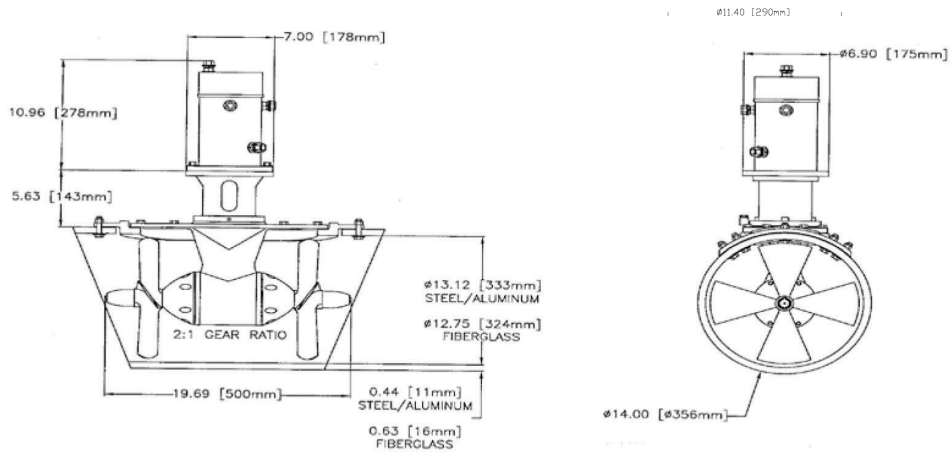

V2-7M 12V ELECTRIC

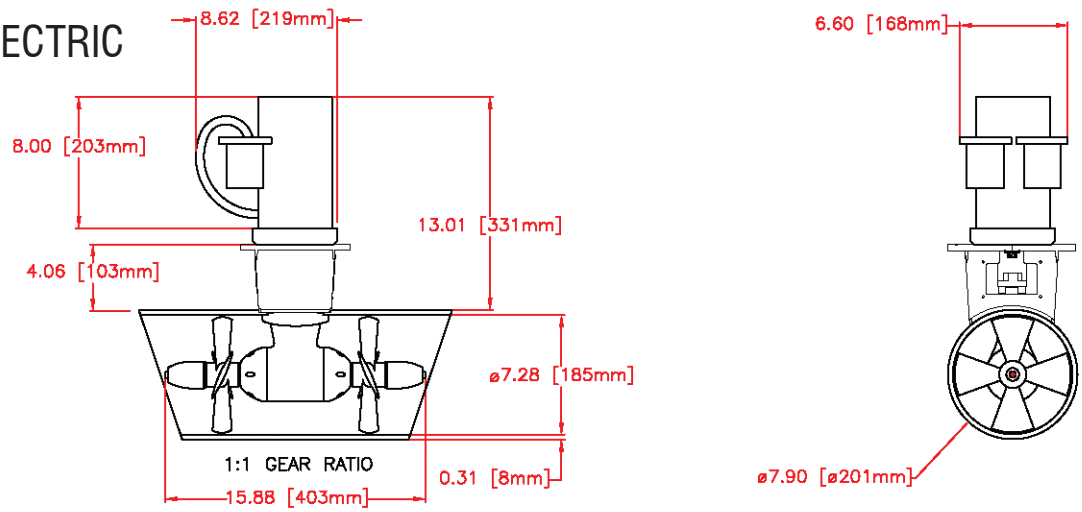

V2-7M DC PRO

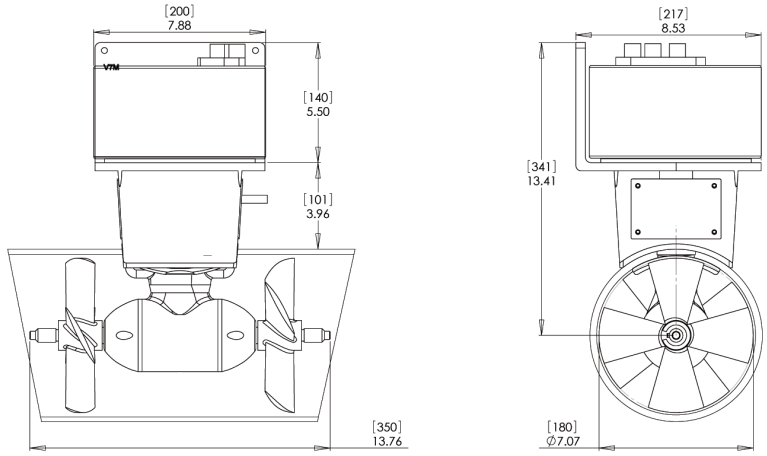

954-463-4307 • D.S. Hull Company Inc. • www.dshullco.com

Like Us On facebook

1-800-437-1002 • D.S. Hull Company, inc. • www.dshullco.com

WESMAR STAINLESS STEEL THRUSTERS

8-Inch No Saddle Bow & Stern Thrusters for Vessels 25-48 feet

Bow and stern thrusters come complete with hydraulic or electric motor, motor adapter, couplings, 2 stainless steel 4 blade Kaplan propellers, 2 zinc nut assemblies, 90 Wt. gear oil pre-filled in drive leg, owner's manual, mounting saddle, oil reservoir fill and breather vents.

Motor Choices

12 VDC 5 HP Electric
V2-8 SS Bow Thruster
Part #10.81000.1

24 VDC 13 HP Electric
V2-8 SS Bow Thruster
Part #10.81024.0

Hydraulic 5-15 HP
V2-8 SS Hyd Bow Thruster
Part #10.28000.2

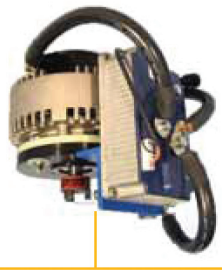

24 VDC Pro 6 HP
V2-8 DC Pro Bow Thruster
Part #10.81003.0
48VDC DC PRO 13 HP
V2-8 DC Pro BowThruster
Part #10.82448.0

Mounting Choices

WESMAR's dual prop, counter-rotating bow and stern thrusters bring more power, less noise and less vibration. The counter rotation splits the power between two matched sets of spiral beveled gears yielding very high propeller efficiency. The aft propeller recovers the swirl energy left behind by the forward propeller creating up to 40% more thrust than single prop thrusters, with the same input power. With more thrust, smaller tunnel diameters are possible, reducing drag, saving space and fuel.

Prices and specifications subject to change without notice.

WESMAR

Like Us On facebook

V2-8NS (12V)

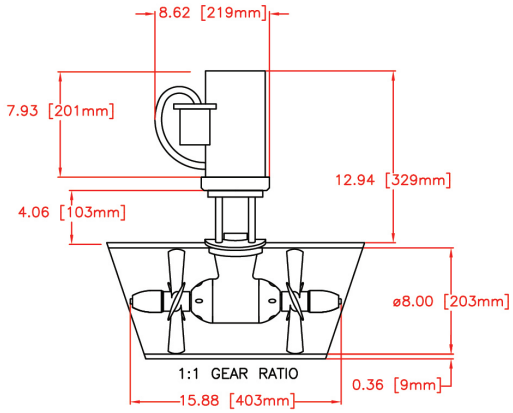

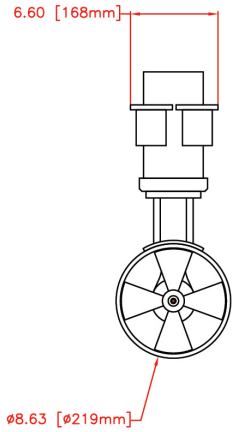

V2-8NS (24V)

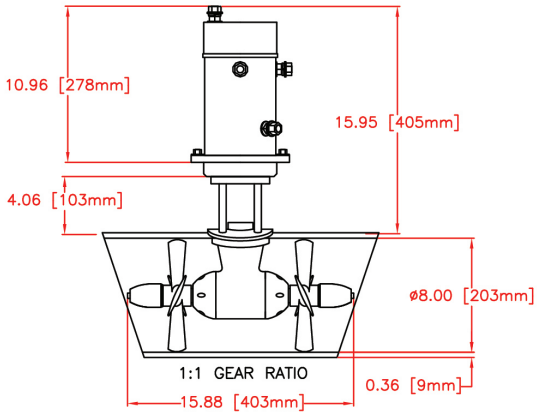

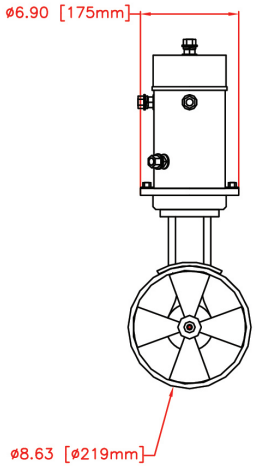

V2-8NS PROPORTIONAL (24V or 48V)

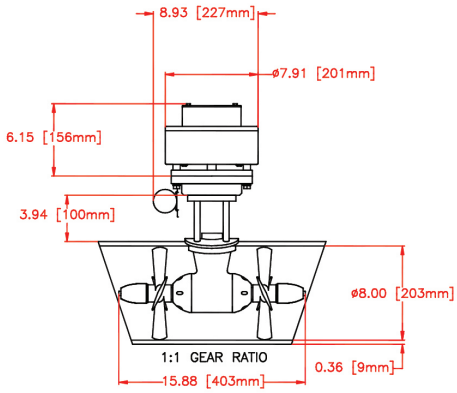

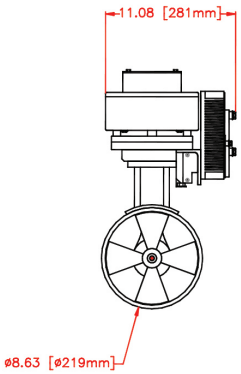

954-463-4307 • D.S. Hull Company, Inc. • www.dshullco.com

Like Us On facebook

1-800-437-1002 • D.S. Hull Company, inc. • www.dshullco.com

WESMAR STAINLESS STEEL THRUSTERS

10-Inch 2-Bolt Bow and Stern Thrusters for Vessels 45-60 feet

Bow and stern thrusters come complete with hydraulic or electric motor, motor adapter, couplings, 2 Stainless steel - 4 blade Kaplan propellers, 2 zinc nut assemblies, 90Wt gear oil pre-filled in drive leg, owner's manual, mounting saddle, oil reservoir fill and breather vents.

Motor Choices

24 VDC 13 HP Electric
V2-10M SS Bow Thruster
2-Bolt- Part #10.11102.0

Hydraulic 10-20 HP
V2-10M SS Bow Thruster
2-Bolt- Part #10.11102.1

48V DC Pro 13 HP
V2-10M SS DC Pro Bow Thruster
2-Bolt- Part #10.11102.4

Mounting Choices

V2-10M

Stern Thruster Tube

WESMAR's dual prop, counter-rotating bow and stern thrusters bring more power, less noise and less vibration. The counter rotation splits the power between two matched sets of spiral beveled gears yielding very high propeller efficiency. The aft propeller recovers the swirl energy left behind by the forward propeller creating up to 40% more thrust than single prop thrusters, with the same input power. With more thrust, smaller tunnel diameters are possible, reducing drag, saving space and fuel.

Prices and specifications subject to change without notice.

WESMAR

DIMENSIONAL DRAWINGS OF THE V2-10M THRUSTERS

V2-10M 24V-13HP

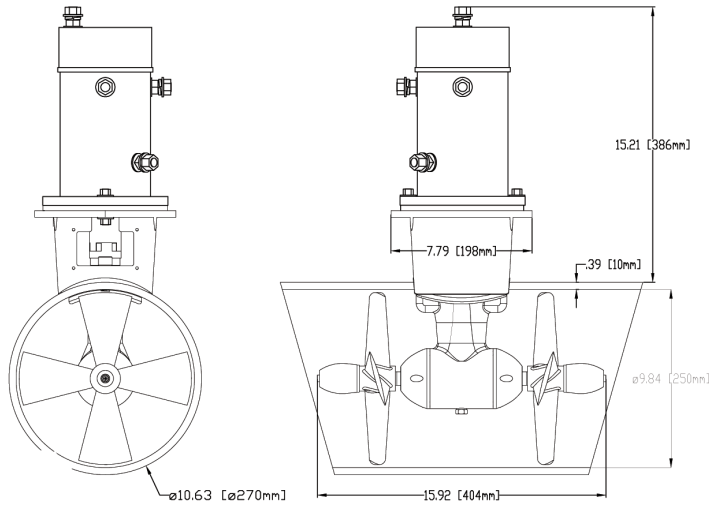

V2-10M 15HP Hydraulic

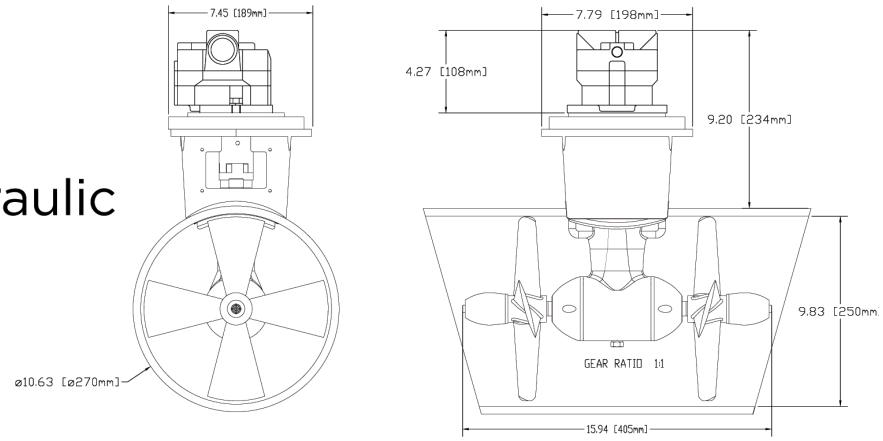

V2-10M 13HP 48V

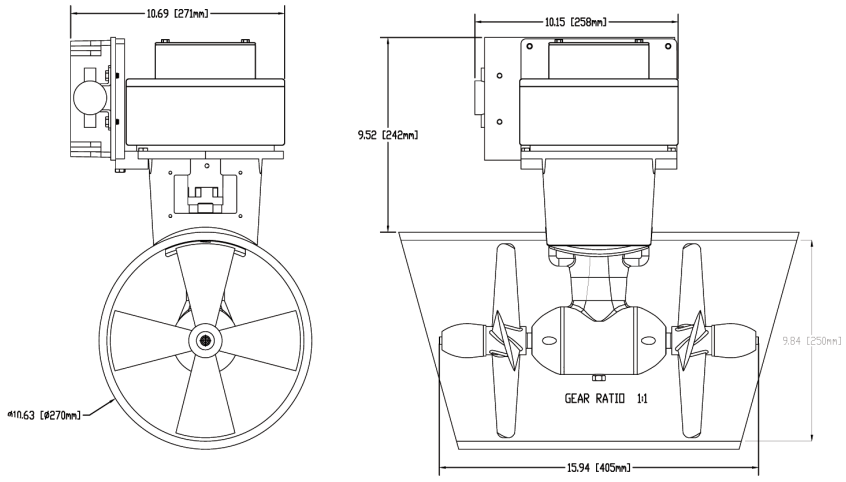

**Dimensions, material and prices subject to change without notice. Contact WESMAR for current product information and pricing.*

Like Us On facebook
954-463-4307 • D.S. Hull Company, Inc. • www.dshullco.com

Like Us On facebook

1-800-437-1002 • D.S. Hull Company, inc. • www.dshullco.com

WESMAR STAINLESS STEEL THRUSTERS

10-Inch Saddle Version Bow Thrusters for Vessels 45-60 feet

Bow and stern thrusters come complete with hydraulic or electric motor, motor adapter, couplings, 2 Stainless steel - 4 blade Kaplan propellers, 2 zinc nut assemblies, 90Wt gear oil pre-filled in drive leg, owner's manual, mounting saddle, oil reservoir fill and breather vents.

Motor Choices

24 VDC 13 HP Electric
V2-10 SS Bow Thruster
Saddle - Part #10.02010.1

Hydraulic 10-20 HP
V2-10 SS Bow Thruster
Saddle - Part #10.02010.3

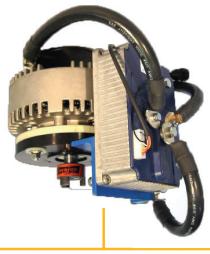

48V DC Pro 13 HP
V2-10 SS DC Pro Bow Thruster
Saddle - Part #10.12448.0

Bow Thruster Stainless Steel mounting saddle supplied with each bow thruster order.

Mounting Choices

Saddle Bow Thruster V2-10

WESMAR's dual prop, counter-rotating bow and stern thrusters bring more power, less noise and less vibration. The counter rotation splits the power between two matched sets of spiral beveled gears yielding very high propeller efficiency. The aft propeller recovers the swirl energy left behind by the forward propeller creating up to 40% more thrust than single prop thrusters, with the same input power. With more thrust, smaller tunnel diameters are possible, reducing drag, saving space and fuel.

Prices and specifications subject to change without notice.

WESMAR

DIMENSIONAL DRAWINGS OF THE V2-10 THRUSTERS

V2-10 24VDC

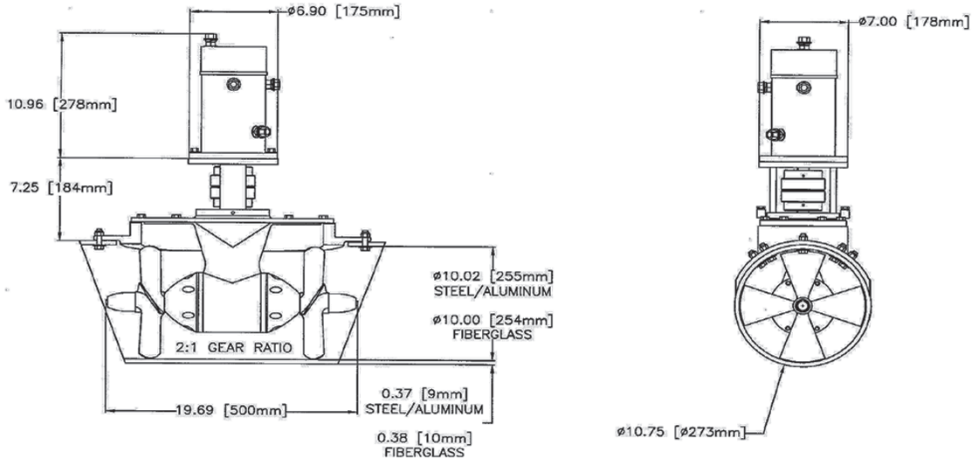

V2-10 HYDRAULIC

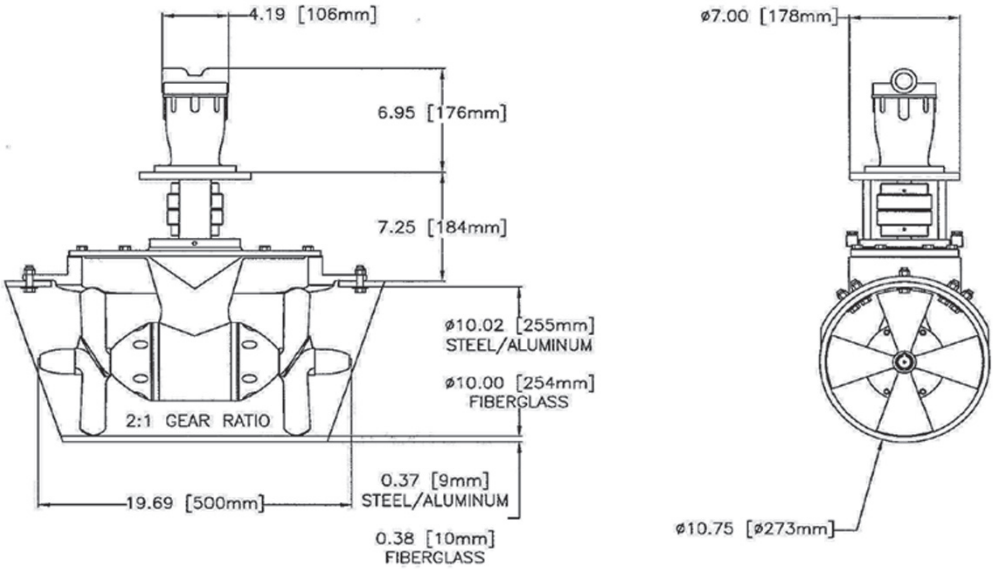

V2-10 48VDC 13HP

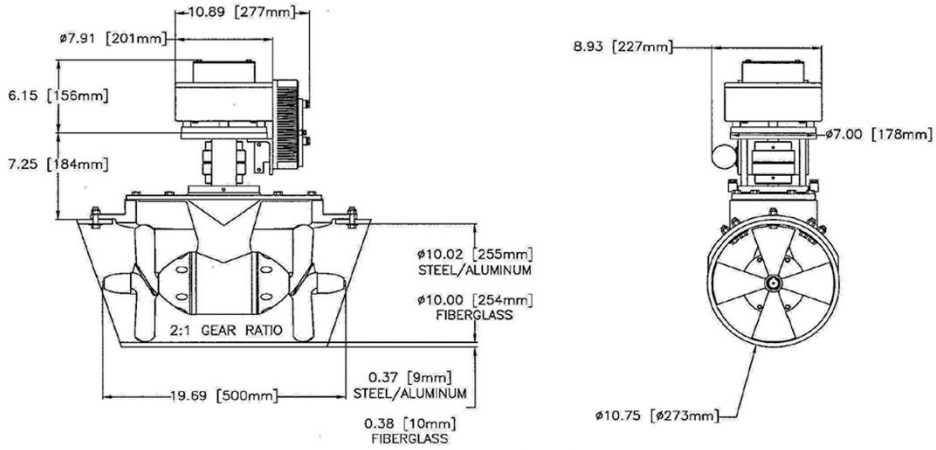

Like Us On facebook

954-463-4307 • D.S. Hull Company, Inc. • www.dshullco.com

Like Us On facebook

1-800-437-1002 • D.S. Hull Company, inc. • www.dshullco.com

WESMAR STAINLESS STEEL THRUSTERS

12-Inch Saddle and Non Saddle Bow & Stern Thrusters for Vessels 45-80 feet

Bow and stern thrusters come complete with hydraulic or electric motor, motor adapter, couplings, 2 Stainless steel - 4 blade Kaplan propellers, 2 zinc nut assemblies, 90Wt gear oil pre-filled in drive leg, owner's manual, mounting saddle, oil reservoir fill and breather vents.

Motor Choices

24 VDC 13 HP Electric
V2-12 SS Bow Thruster
Saddle - Part #10.02012.1
4-Bolt- Part #10.00012.3

Hydraulic 15-40 HP
V2-12 SS Bow Thruster
Saddle - Part #10.02012.1
4-Bolt- Part #10.00012.5

48V DC Pro 13 HP
V2-12 SS DC Pro Bow Thruster
Saddle - Part #10.02448.0
4-Bolt- Call for Part #

48V DC Pro 23 HP
V2-12 SS DC Pro Bow Thruster
Saddle - Part #10.23048.0
4-Bolt- Part #10.0012.4

Mounting Choices

Bow Thruster Stainless Steel mounting saddle supplied with each bow thruster order.

Saddle Bow Thruster

4-Bolt

Stern Thruster

WESMAR's dual prop, counter-rotating bow and stern thrusters bring more power, less noise and less vibration. The counter rotation splits the power between two matched sets of spiral beveled gears yielding very high propeller efficiency. The aft propeller recovers the swirl energy left behind by the forward propeller creating up to 40% more thrust than single prop thrusters, with the same input power. With more thrust, smaller tunnel diameters are possible, reducing drag, saving space and fuel.

Prices and specifications subject to change without notice.

WESMAR

DIMENSIONAL DRAWINGS OF THE V2-12 THRUSTERS

V2-12 24VDC

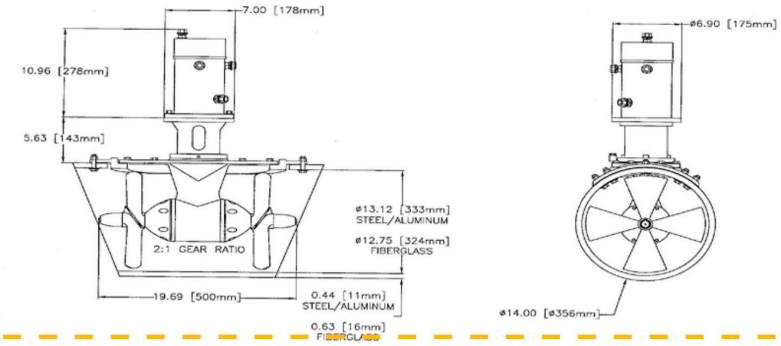

V2-12 Hydraulic

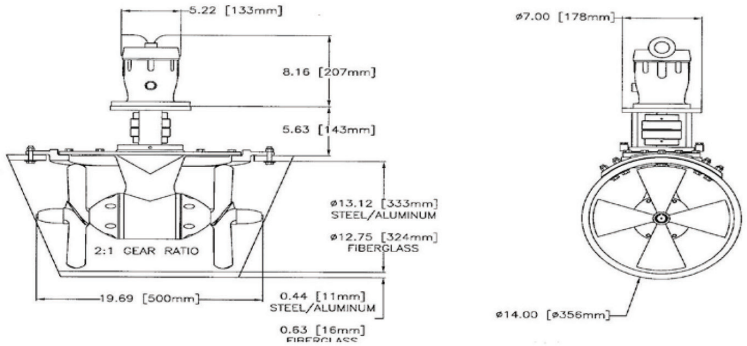

V2-12 48VDC 13HP

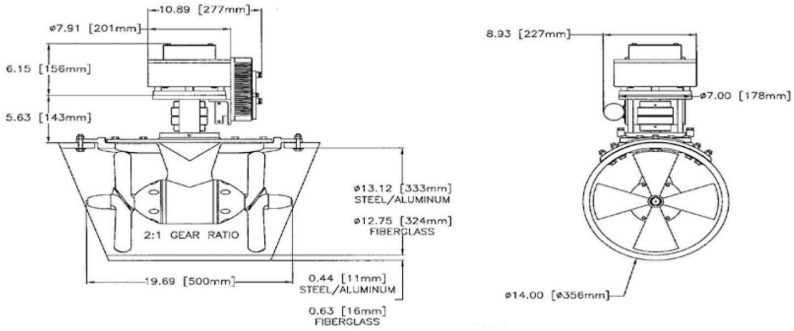

V2-12 48VDC 23HP

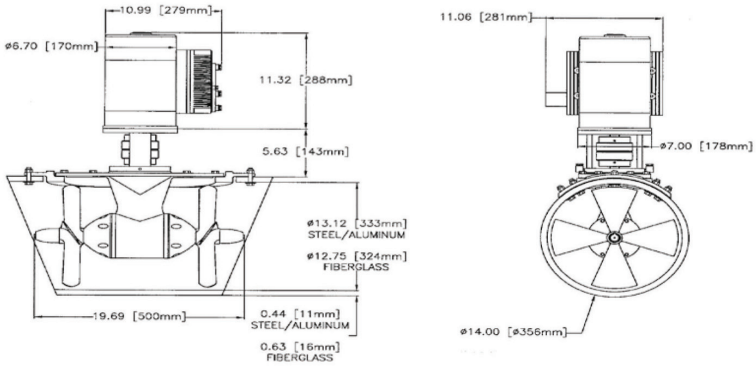

**Dimensions, material and prices subject to change without notice. Contact WESMAR for current product information and pricing.*

Like Us On facebook

954-463-4307 • D.S. Hull Company, Inc. • www.dshullco.com

Like Us On facebook

1-800-437-1002 • D.S. Hull Company, inc. • www.dshullco.com

WESMAR STAINLESS STEEL THRUSTERS

16-Inch Saddle and non Saddle Bow & Stern Thrusters for Vessels 60-120 Feet

Bow and stern thrusters complete with hydraulic or electric motor, motor adapter, couplings, 2 stainless steel Kaplan propellers, 2 zinc nut assemblies, 90Wt. gear oil pre-filled in drive leg, owner's manual, mounting saddle, oil reservoir fill and breather vents.

Motor Choices

Hydraulic Motor 50-60 HP

16 Inch Hydraulic
3.0 CID Motor
V2-16 SS Bow Thruster

Saddle Thruster
Part #10.02016.1

Non Saddle Thruster
Part #10.12016.2 Aluminum
Part #10.16000.1 Steel

Saddle Mount - saddle version for fiberglass, wood, aluminum or steel

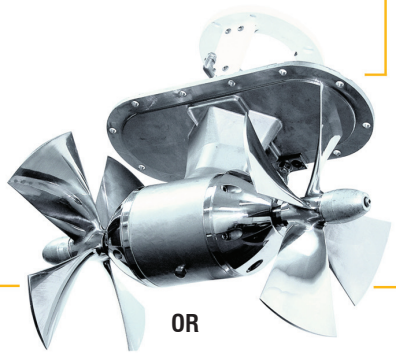

OR

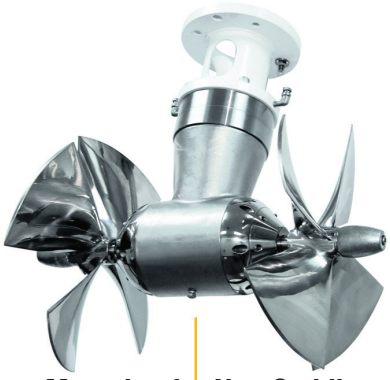

Mounting for Non Saddle

Non Saddle NS Series for aluminum or steel applications for the bow and stern thruster
V2-16 NS Series
V2-16 NS - 50 HP
V2-16 NS - 60 HP

AC Motor 40-60 HP

AC Motor 40-60 HP
must run 240 to 460 VAC
3-Phase Packages
AC Systems - Please Call for pricing, systems range with generator specifications. Motor adaptors and couplings are optional.
*Includes frequency drive

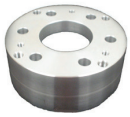

Weld in tunnel ring does not require the stern mounting plate.

Prices and specifications subject to change without notice.

WESMAR

DIMENSIONAL DRAWINGS OF THE V2-16 THRUSTERS

V2-16 Saddle

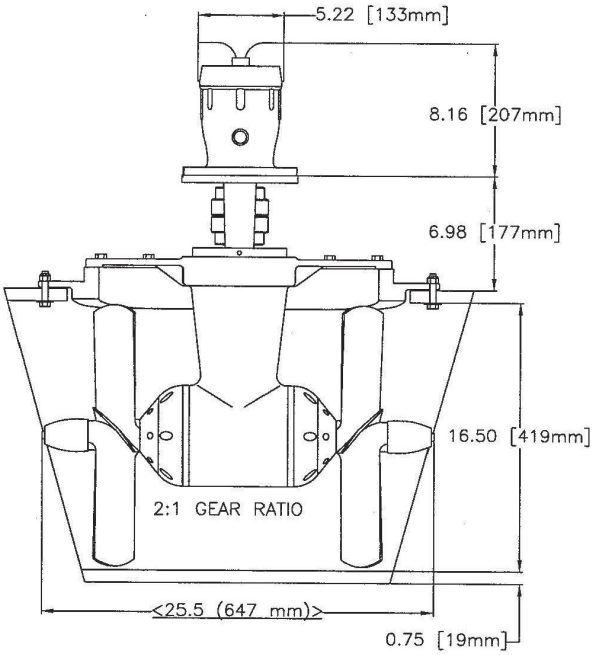

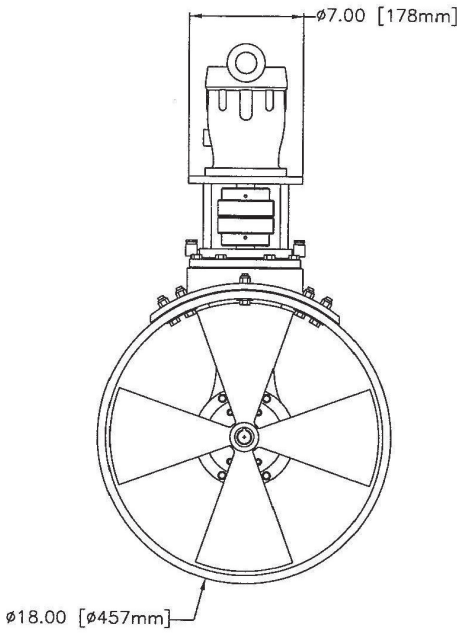

V2-16 Non Saddle

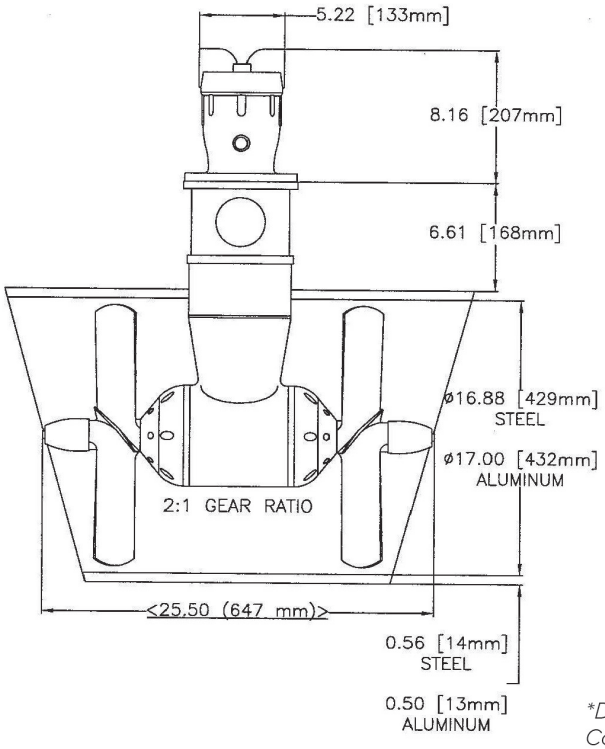

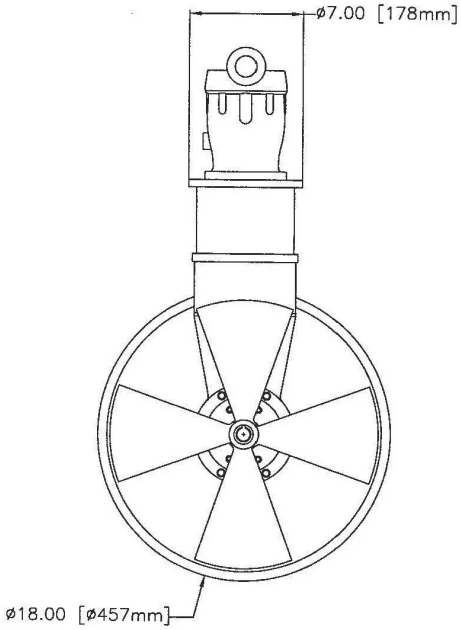

**Dimensions, material and prices subject to change without notice. Contact WESMAR for current product information and pricing.*

Like Us On facebook

954-463-4307 • D.S. Hull Company, Inc. • www.dshullco.com

Like Us On facebook

1-800-437-1002 • D.S. Hull Company, inc. • www.dshullco.com

WESMAR STAINLESS STEEL THRUSTERS

18-Inch Saddle and Non Saddle Bow & Stern Thrusters for Vessels 60-140 feet

Bow and stern thrusters come complete with hydraulic or electric motor, motor adapter, couplings, 2 Stainless steel - 4 blade Kaplan propellers, 2 zinc nut assemblies, 90Wt gear oil pre-filled in drive leg, owner's manual, mounting saddle, oil reservoir fill and breather vents.

Motor Choices

Hydraulic Motor 75-100 HP

V2-18 SS Thruster

AC Motor 75-100 HP

AC Motor 75-100HP
208-480 VAC
3-Phase Packages Available
AC Systems - Systems range with generator specifications. *Motor adaptors and couplings are optional.
* Includes frequency drive

Mounting Choices

Non saddle NS Series
For aluminum or steel applications for the bow and stern thruster.

V2-18 NS Series
75HP to 100HP

*Dimensions, material and prices subject to change without notice. Contact WESMAR for current product information and pricing.

Weld in tunnel ring does not require the stern mounting plate.

WESMAR's dual prop, counter-rotating bow and stern thrusters bring more power, less noise and less vibration. The counter rotation splits the power between two matched sets of spiral beveled gears yielding very high propeller efficiency. The aft propeller recovers the swirl energy left behind by the forward propeller creating up to 40% more thrust than single prop thrusters, with the same input power. With more thrust, smaller tunnel diameters are possible, reducing drag, saving space and fuel.

Prices and specifications subject to change without notice.

WESMAR

DIMENSIONAL DRAWINGS OF THE V2-18 THRUSTERS

V2-18 Non-Saddle

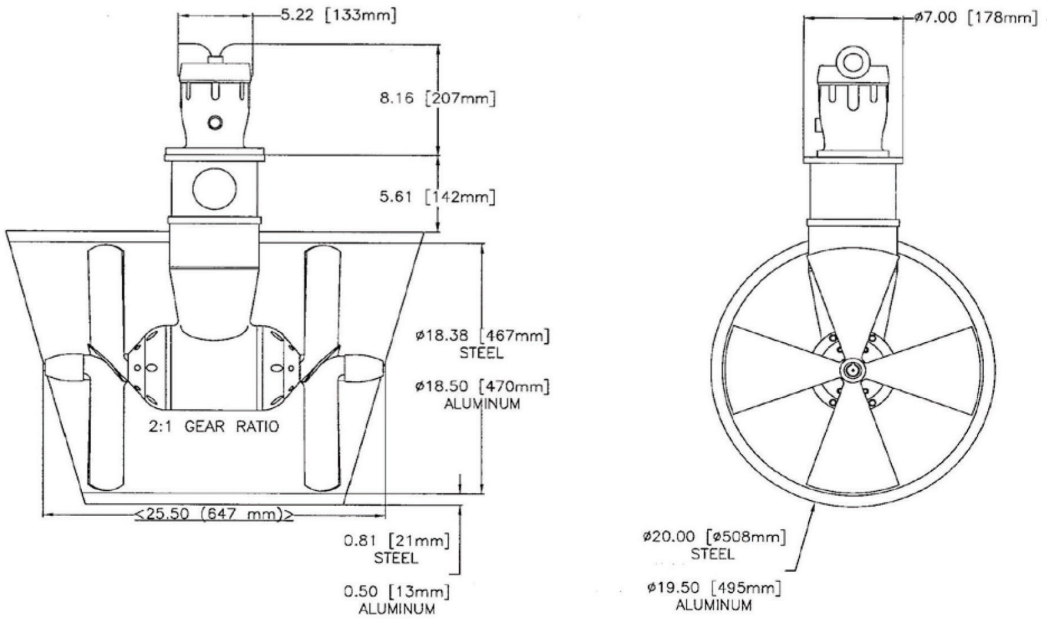

Like Us On facebook

954-463-4307 • D.S. Hull Company, Inc. • www.dshullco.com

Like Us On facebook

1-800-437-1002 • D.S. Hull Company, inc. • www.dshullco.com

WESMAR STAINLESS STEEL THRUSTERS

20-Inch Saddle and Non Saddle Bow & Stern Thrusters for Vessels 90-165 feet

Bow and stern thrusters come complete with hydraulic or electric motor, motor adapter, couplings, 2 Stainless steel - 4 blade Kaplan propellers, 2 zinc nut assemblies, 90Wt gear oil pre-filled in drive leg, owner's manual, mounting saddle, oil reservoir fill and breather vents.

Motor Choices

AC Motor 75-150HP

AC Motor 75-150HP
Must run 380 or 480 VAC
100 HP maximum for 240 Volt 3-phase
Includes frequency drive
AC Systems - Systems range with generator specifications. *Motor adaptors and couplings are optional.

* AC motors require motor adapters and couplings

V2-20 NS S/S Thruster

Hydrualic Motor 75-150HP

Non saddle NS Series for aluminum or steel applications for the bow and stern thruster.

Saddle Mount
Saddle version for fiberglass, wood, aluminum, or steel.

Weld in tunnel ring does not require the stern mounting plate.

Stern Thruster stainless steel mounting plate supplied with each stern thruster for the V2-20 saddle version thruster.

WESMAR's dual prop, counter-rotating bow and stern thrusters bring more power, less noise and less vibration. The counter rotation splits the power between two matched sets of spiral beveled gears yielding very high propeller efficiency. The aft propeller recovers the swirl energy left behind by the forward propeller creating up to 40% more thrust than single prop thrusters, with the same input power. With more thrust, smaller tunnel diameters are possible, reducing drag, saving space and fuel.

Prices and specifications subject to change without notice.

WESMAR

DIMENSIONAL DRAWINGS OF THE V2-20 THRUSTERS

Saddle Versions

75HP

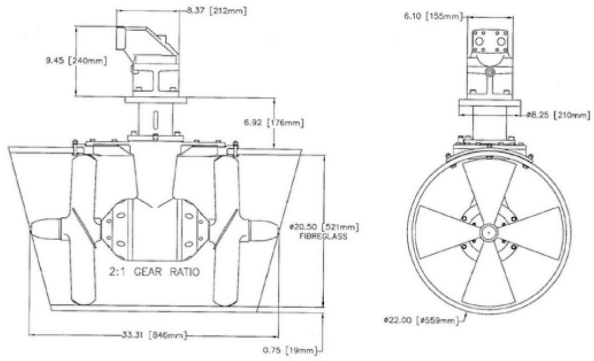

100HP

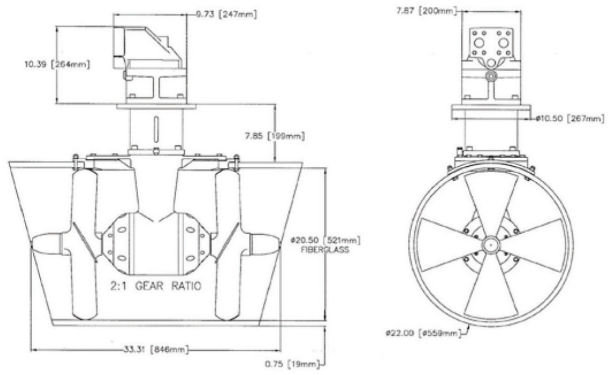

150HP

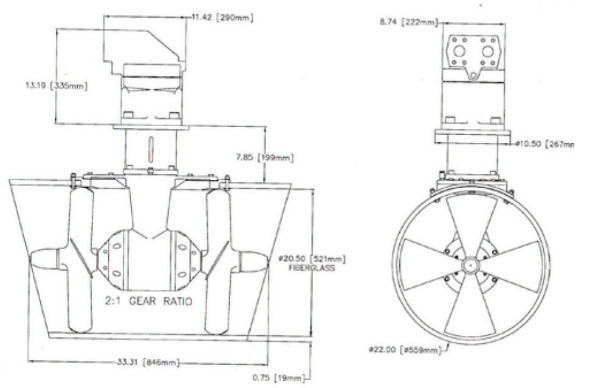

Non Saddle Versions

75HP

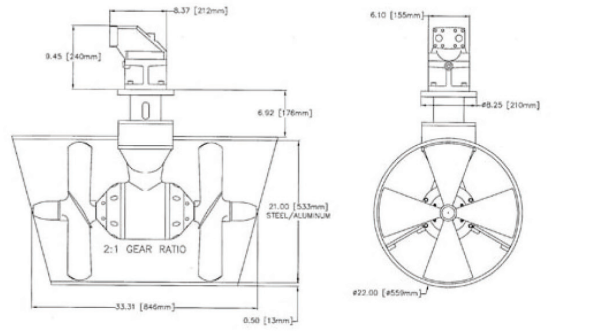

100HP

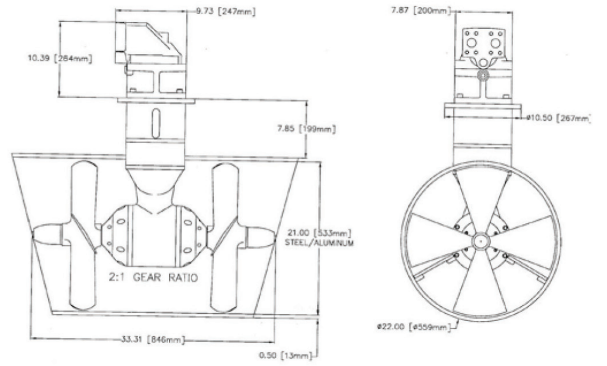

150HP

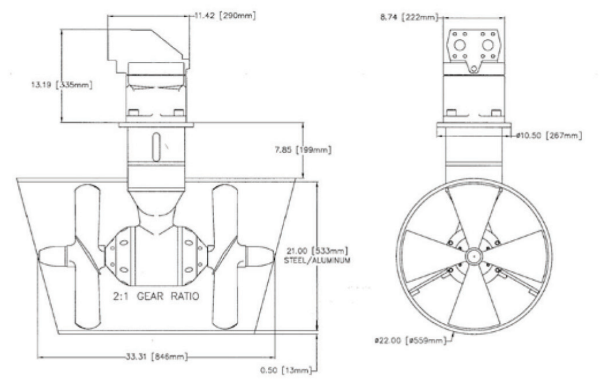

*Dimensions, material and prices subject to change without notice.
Contact WESMAR for current product information and pricing.

Like Us On facebook

954-463-4307 • D.S. Hull Company Inc. • www.dshullco.com

Like Us On facebook

1-800-437-1002 • D.S. Hull Company, inc. • www.dshullco.com

WESMAR STAINLESS STEEL THRUSTERS

24 & 26 Inch Non Saddle Bow & Stern Thrusters

Bow and stern thrusters come with weld in tunnel ring, 2 Nibral 4-blade Kaplan propellers, 2 nut assemblies, 90Wt gear oil pre-filled in drive leg, owner's manual, oil reservoir fill and breather vents, 2 spar and zinc assemblies.

AC Motor 150-225HP

AC Systems - Systems range with generator specifications.

AC Motor 150-225HP
Must run 380 or 480 VAC
3-Phase only
*Includes frequency drive

Hydraulic Piston Motor 150-225HP

Hydraulic 150-225HP

V2 24-26 SS Thruster

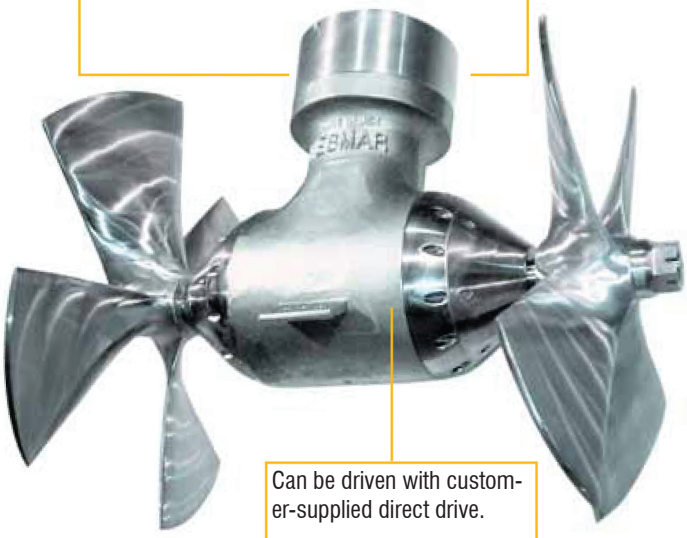

Can be driven with customer-supplied direct drive.

Steel or Aluminum Weld in Tunnel Ring provided with system (specify type required with order) sizes vary with tunnel version.

*Dimensions, material and prices subject to change without notice. Contact WESMAR for current product information and pricing.

WESMAR's dual prop, counter-rotating bow and stern thrusters bring more power, less noise and less vibration.
The counter rotation splits the power between two matched sets of spiral beveled gears yielding very high propeller efficiency. The aft propeller recovers the swirl energy left behind by the forward propeller creating up to 40% more thrust than single prop thrusters, with the same input power. With more thrust, smaller tunnel diameters are possible, reducing drag, saving space and fuel.

WESMAR

DIMENSIONAL DRAWINGS OF THE V2-24 THRUSTERS

V2-24 Non Saddle No Motor

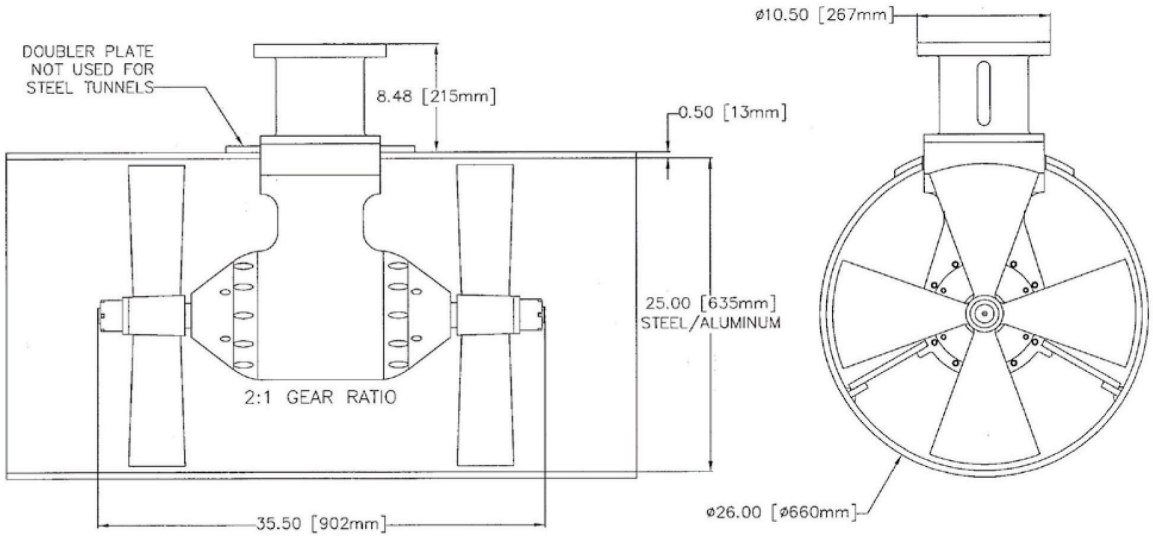

V2-26 Non Saddle No Motor

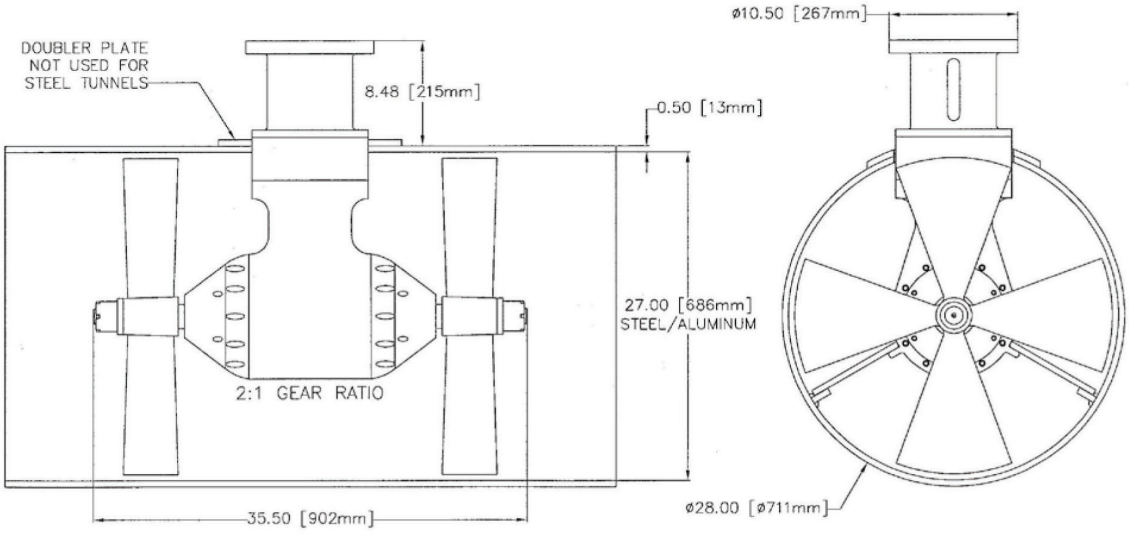

**Dimensions, material and prices subject to change without notice.*
Contact WESMAR for current product information and pricing.

Like Us On facebook

954-463-4307 • D.S. Hull Company, Inc. • www.dshullco.com

Like Us On facebook

1-800-437-1002 • D.S. Hull Company, inc. • www.dshullco.com

WESMAR STAINLESS STEEL THRUSTERS

34-Inch Non Saddle Bow & Stern Thrusters

Hydraulic Piston Motor 250-350HP

Bow and stern thrusters come complete with weld in tunnel ring, 2 Nibral 4-blade Kaplan propellers, 2 zinc nut assemblies, 90Wt gear oil pre-filled in drive leg, owner's manual, oil reservoir fill and breather vents, 2 spar and zinc assemblies.

Non Saddle Version for Steel or Aluminum Vessels Only
All Drives: Hydraulic and AC are quoted on an individual basis, please contact WESMAR.

AC Motor 250-350HP

*Includes frequency drive

AC Systems - Systems range with generator specifications

Hydraulic Piston Motor 250-350HP

250-350HP Call for quote

V2-34 SS Thruster

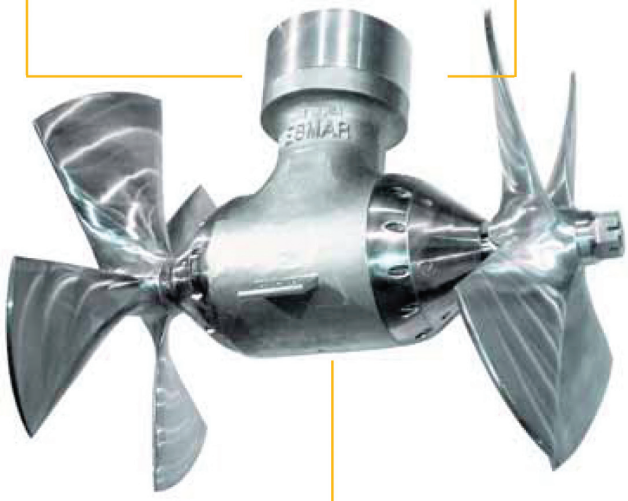

*Dimensions, material and prices subject to change without notice. Contact WESMAR for current product information and pricing

(Also including 1 meter of tunnel with tunnel ring welded in and with thruster pre-installed.) At additional cost.

V2-34 Bow & Stern Thruster w/o Motor for a customer-supplied direct drive application.

Steel or Aluminum Weld in Tunnel Ring provided with system (specify type required with order) sizes vary with tunnel version.

WESMAR's dual prop, counter-rotating bow and stern thrusters bring more power, less noise and less vibration.
The counter rotation splits the power between two matched sets of spiral beveled gears yielding very high propeller efficiency. The aft propeller recovers the swirl energy left behind by the forward propeller creating up to 40% more thrust than single prop thrusters, with the same input power. With more thrust, smaller tunnel diameters are possible, reducing drag, saving space and fuel.

WESMAR

DIMENSIONAL DRAWINGS OF THE V2-34 THRUSTERS

V2-34 Non Saddle No Motor

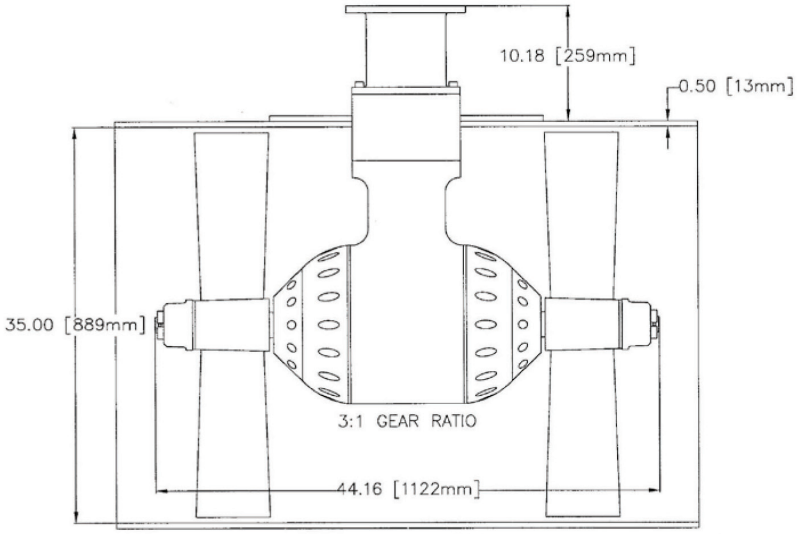

INSTALLATION DETAILS			
POWER	250 HP (187 kW)	300 HP (224 kW)	350 HP (261 kW)
MINMUM SAFE INPUT RPM	1800 RPM	2200 RPM	2600 RPM
RECOMMENDED INPUT RPM	2100 RPM	2200 RPM	2600 RPM
SHAFT COUPLER	REULAND RC-6	REULAND RC-6	REULAND RC-6
PROP DIAMETER	34.00" (864 mm)	34.00" (864 mm)	34.00" (864 mm)
SUPPLIED PROP PITCH	23" (584 mm)	23" (584 mm)	20" (508 mm)
MAXIMUM THRUST	7000 lbf (31000 N)	7900 lbf (35000 N)	8750 lbf (39000 N)
HULL MATERIAL	STEEL OR ALUMINUM	STEEL OR ALUMINUM	STEEL OR ALUMINUM
TUNNEL OD	36.00" (914 mm)	36.00" (914 mm)	36.00" (914 mm)
TUNNEL ID	35.00" (889 mm)	35.00" (889 mm)	35.00" (889 mm)
THRUSTER BOLT TORQUE	15 ft.lbf (20 Nm)	15 ft.lbf (20 Nm)	15 ft.lbf (20 Nm)

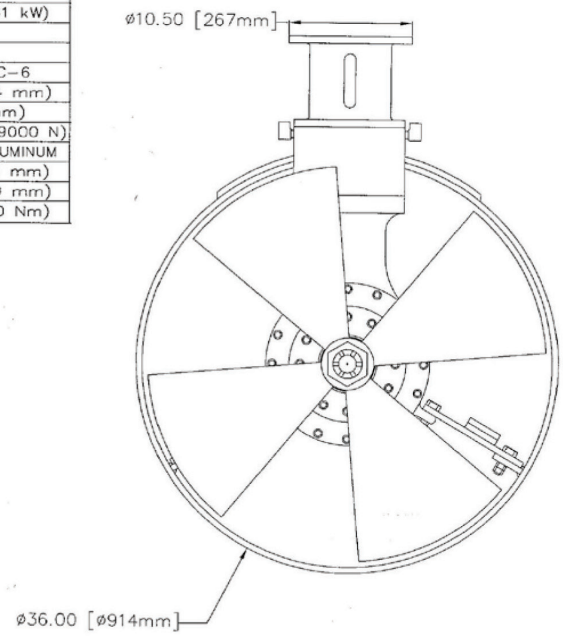

**Dimensions, material and prices subject to change without notice.*
Contact WESMAR for current product information and pricing.

Like Us On facebook

954-463-4307 • D.S. Hull Company Inc. • www.dshullco.com

Like Us On facebook

WESMAR DSP5000 STABILIZER

CONTINUOUS FEEDBACK DIGITAL CONTROL

- Smooth quiet ride with minimal noise
- Easy-to-Use settings menu
- Convenient USB diagnostic port for system troubleshooting
- Complete digital control providees rapid response of hydraulics and highly accurate fin position
- Advanced electronic gyro has built-in accelerometer providing extensive roll and heave control
- Water resistant LCD Display viewable in direct sunlight
- NEMA 2000 interface and CANBUS compatible

WESMAR stabilizers provide quiet, precise stabilization in all sea states and all speeds. its Wave-Smart Continuous Feedback Digital Controller, proprietary technology developed by WESMAR, has changed the way comfort is measured underway and at anchor. The electronic gyro senses the horizon and provides excellent stabilization while your vessel is pushed downhill in quartering seas. Available fin sizes range from 2.5 to 34 square feet to accommodate smaller to large size work or pleasure boats.

WESMAR hydrodynamic stabilizer fins are made with a hhigh density closed-cell foam encased in a heavy fiberglass shell. This neutrally buoyant durable structure encloses a steel plate that provides high strength to the fin and its 17-4 PH stainless steel control arm shaft. The design makes it “sacrificial” in that it will absorb slight impacts without damage, but can break away if necessary to help protect your hull.

WESMAR fins provide the best lift-to-drag ratio in the industry. They are built to NACA-0015 standards with excellent corrosion and foul resistant characteristics. They are also compatible with a wide variety of hull materials, and because they are neutrally buoyant do not add to the weight of your vessel.

1-800-437-1002 • D.S. Hull Company, inc. • www.dshullco.com

Prices and specifications subject to change without notice.

WESMAR

s sylstems are made with a variety of precision made components put together to best fit the characteristics of your vessel. Our engineers take into account all parameters, from hull shape and material, to engine power and more to provide a stabilizer package that will exceed yuor expectations.

Dual Cylinder Fin Actuator

Single Cylinder Fin Actuator

Typical Hydraulic Tank with Valve Drive Junction Box Mounted to Right Side

"Made-to-Fit" tailored hydraulic packages for your stabilizer system are clean, rugged, and built for heavy-duty service. Most components are powder coated with a corrosion resistant white finish that is easy to maintain and looks great in any engine compartment.

At the heart of WESMAR'sl Wave-Smart Continuous Feedback Digital Controller provides accurate real time control feedback for roll and horizon. Because this proprietary instrument functions continuously, you get the smootherst ride possible in all sea conditions. Aside from remaiining stable underway, in hard turns, and as speed decreases, the gyro's feedback when used at anchor gives you on-land stability. Our at anchor fins move at 50 degrees per second while ramping down slowly at the end of each cylinder stroke.

3-Axis Gyro

Four -Step DSP5000 Upgrade Will Give you New Levels of Comfort...
Whether you have an older WESMAR stabilizer system or one manufactured by another company, WESMAR has upgrade kits to bring your vessel to the smooth and quiet Wave-Smart level of comfort. The changeover is easy!

- Replace control console junction box
- Replace your current controller with Wave-Smart
- Install proprietary 3-axis gyro
- Modify valve drive wiring connections

Like Us On facebook

954-463-4307 • D.S. Hull Company, Inc. • www.dshullco.com

Like Us On facebook

1-800-437-1002 • D.S. Hull Company, inc. • www.dshullco.com

WESMAR

WESMAR STABILIZERS

Single Cylinder Actuator

250 SERIES
Fin/Shaft Sizes

FS250-4.5 4.5 Square Feet 2.5 inch shaft	FS250-6.0 6 Square Feet 2.5 inch shaft
FS250-7.5 7.5 Square feet 2.5 inch shaft	FS250-9.0 9 square feet 2.5 inch shaft

Electronics
DSP5000 3-Axis Gyro

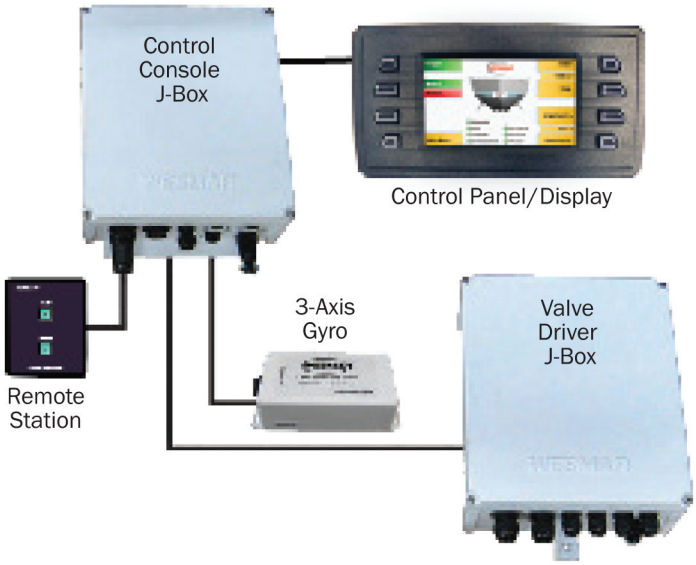

Prices and specifications subject to change without notice.

WESMAR

FIN DIMENSIONS

FS250-4.5

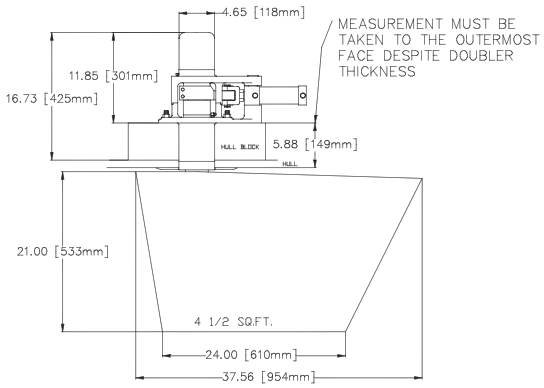

FS250-6.0

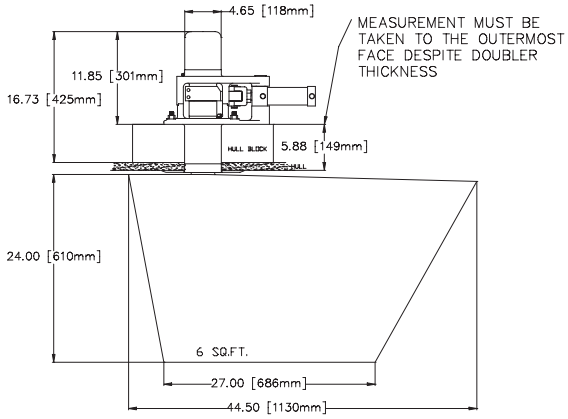

FS250-7.5

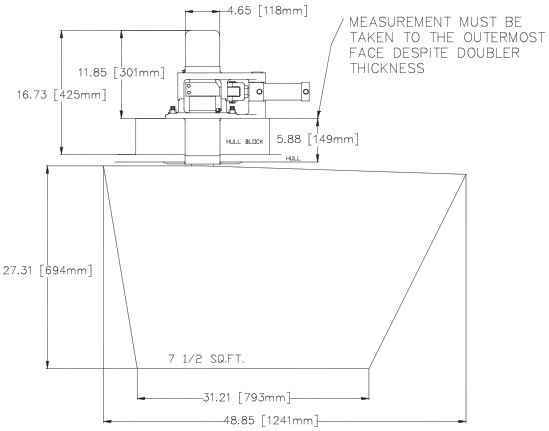

FS250-9.0

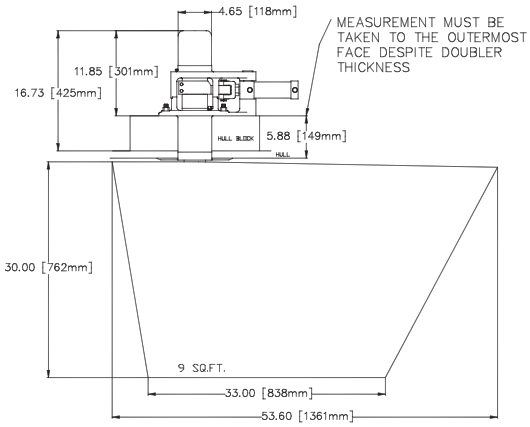

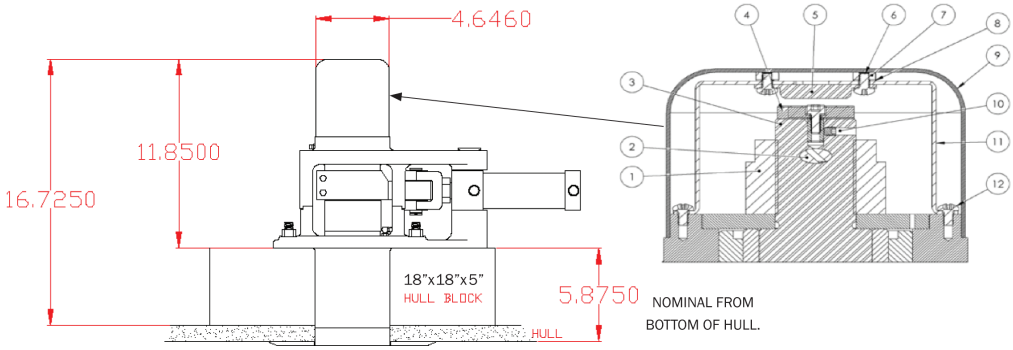

Like Us On facebook

954-463-4307 • D.S. Hull Company, Inc. • www.dshullco.com

WESMAR

WESMAR STABILIZERS

Like Us On facebook

1-800-437-1002 • D.S. Hull Company, inc. • www.dshullco.com

Dual Cylinder Actuator

FS350- SERIES
Fin/Shaft Sizes

FS350-4.5
4.5 square feet
3.5 inch shaft

FS350-6.0
6 square feet
3.5 inch shaft

FS350-7.5
7.5 square feet
3.5 inch shaft

FS350-9.0
9 square feet
3.5 inch shaft

FS350-12.0
12 square feet
3.5 inch shaft

FS350-16.0
16 square feet
3.5 inch shaft

Electronics
DSP5000 3-Axis Gyro

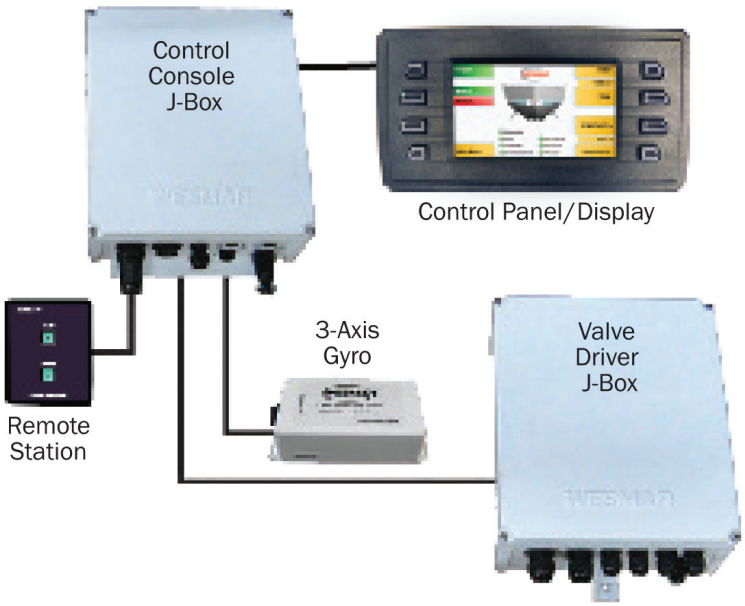

Prices and specifications subject to change without notice.

WESMAR

Fin Dimensions

FS350-4.5

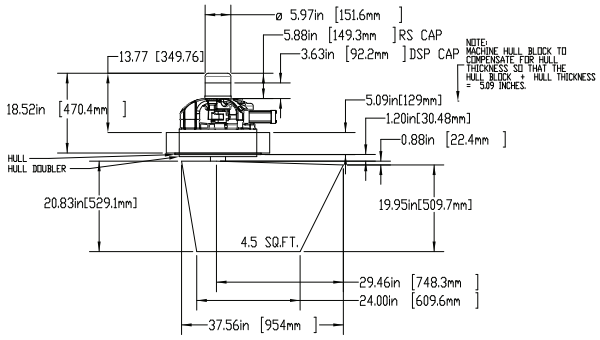

FS350-6.0

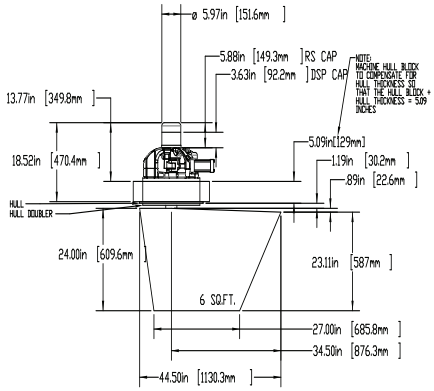

FS350-7.5

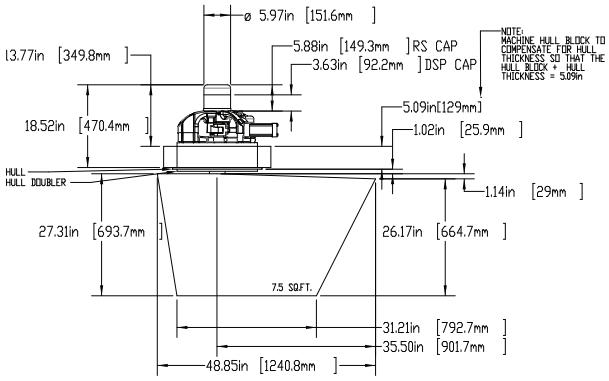

FS350-9.0

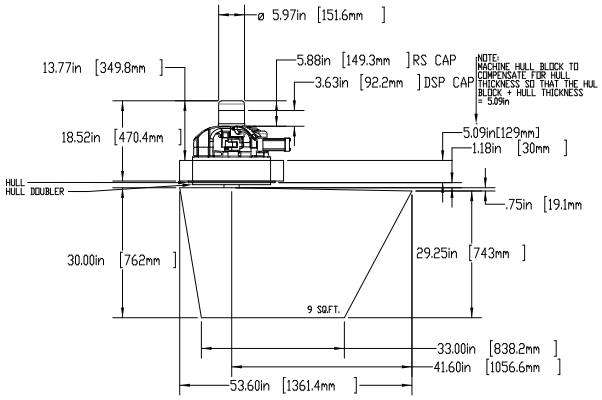

FS350-12.0

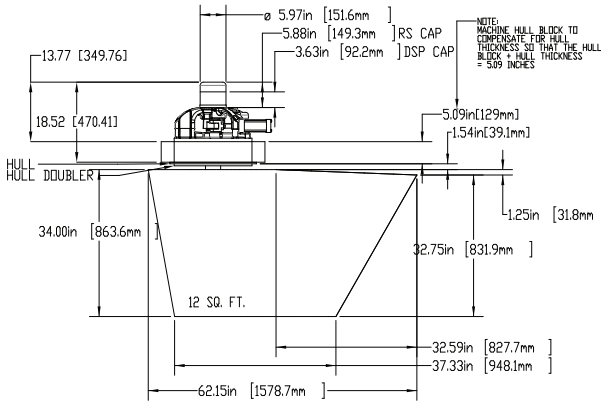

FS350-16.0

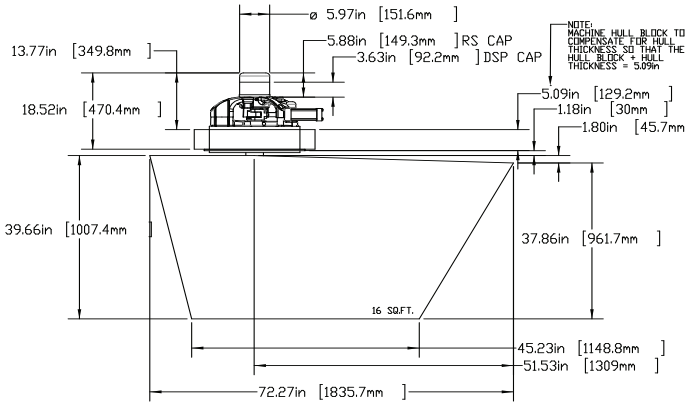

Like Us On facebook

954-463-4307 • D.S. Hull Company Inc. • www.dshullco.com

Like Us On facebook

1-800-437-1002 • D.S. Hull Company, inc. • www.dshullco.com

WESMAR

Single Cylinder Actuator - Exploded View
RS200 Series with 2.5" Shaft - See Pages 36 & 37 for Parts List

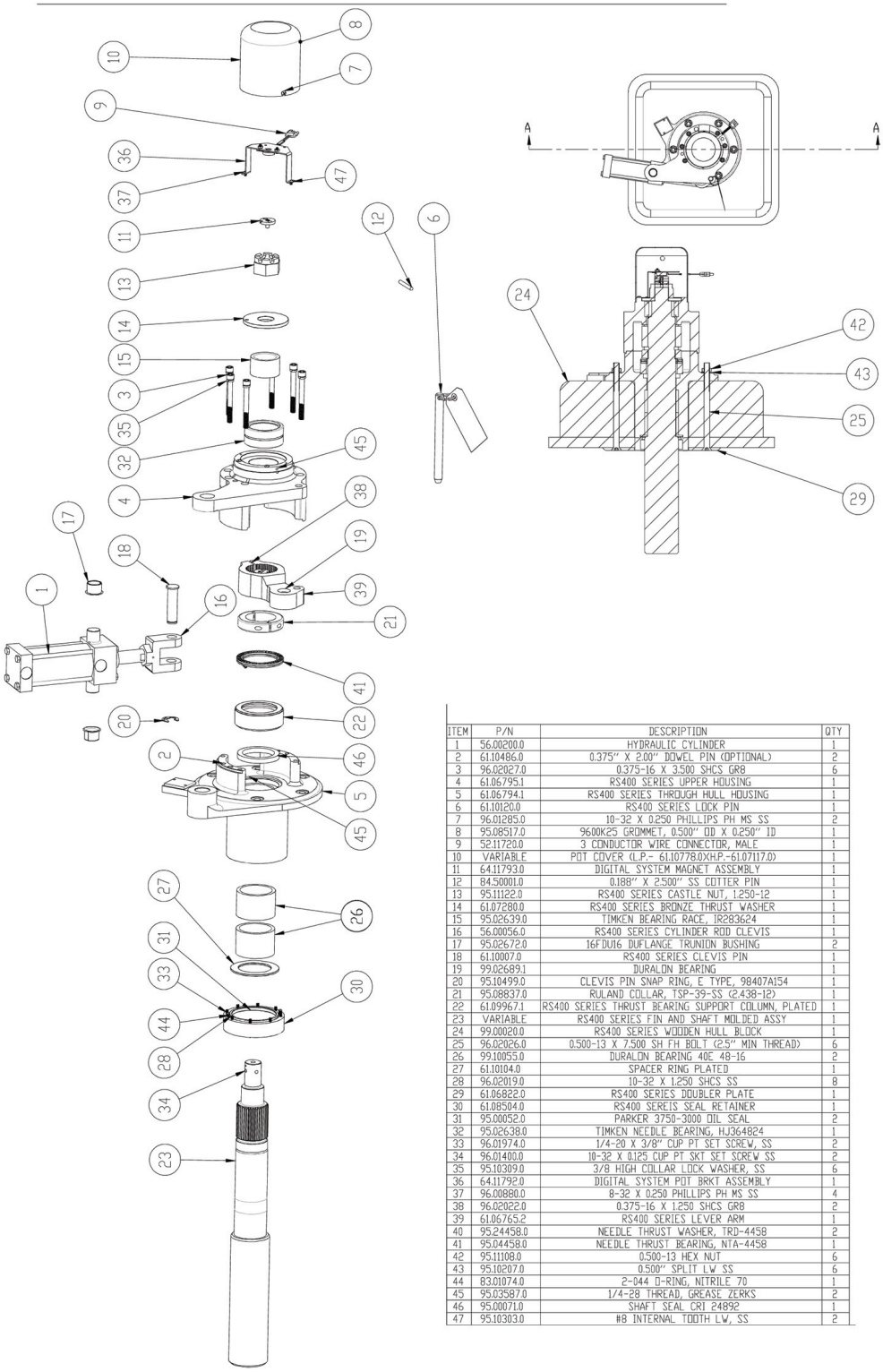

ITEM	P/N	DESCRIPTION	QTY
1	56.00200.0	HYDRAULIC CYLINDER	1
2	61.10486.0	0.375" X 2.00" DOWEL PIN (OPTIONAL)	2
3	96.02027.0	0.375-16 X 3.500 SHCS GR8	6
4	61.06795.1	RS400 SERIES UPPER HOUSING	1
5	61.06794.1	RS400 SERIES THROUGH HULL HOUSING	1
6	61.10120.0	RS400 SERIES LOCK PIN	1
7	96.01285.0	10-32 X 0.250 PHILLIPS PH MS SS	2
8	95.08517.0	9600K25 GROMMET, 0.500" OD X 0.250" ID	1
9	52.11720.0	3 CONDUCTOR WIRE CONNECTOR, MALE	1
10	VARIABLE	POT COVER (L.P.- 61.10778.0)(H.P.-61.07117.0)	1
11	64.11793.0	DIGITAL SYSTEM MAGNET ASSEMBLY	1
12	84.50001.0	0.188" X 2.500" SS COTTER PIN	1
13	95.11122.0	RS400 SERIES CASTLE NUT, 1.250-12	1
14	61.07280.0	RS400 SERIES BRONZE THRUST WASHER	1
15	95.02639.0	TIMKEN BEARING RACE, IR283624	1
16	56.00056.0	RS400 SERIES CYLINDER ROD CLEVIS	1
17	95.02672.0	16FDU16 DUFLANGE TRUNION BUSHING	2
18	61.10007.0	RS400 SERIES CLEVIS PIN	1
19	99.02689.1	DURALON BEARING	1
20	95.10499.0	CLEVIS PIN SNAP RING, E TYPE, 98407A154	1
21	95.08837.0	RULAND COLLAR, TSP-39-SS (2.438-12)	1
22	61.09967.1	RS400 SERIES THRUST BEARING SUPPORT COLUMN, PLATED	1
23	VARIABLE	RS400 SERIES FIN AND SHAFT MOLDED ASSY	1
24	99.00020.0	RS400 SERIES WOODEN HULL BLOCK	1
25	96.02026.0	0.500-13 X 7.500 SH FH BOLT (2.5" MIN THREAD)	6
26	99.10055.0	DURALON BEARING 40E 48-16	2
27	61.10104.0	SPACER RING PLATED	1
28	96.02019.0	10-32 X 1.250 SHCS SS	8
29	61.06822.0	RS400 SERIES DOUBLER PLATE	1
30	61.08504.0	RS400 SEREIS SEAL RETAINER	1
31	95.00052.0	PARKER 3750-3000 OIL SEAL	2
32	95.02638.0	TIMKEN NEEDLE BEARING, HJ364824	1
33	96.01974.0	1/4-20 X 3/8" CUP PT SET SCREW, SS	2
34	96.01400.0	10-32 X 0.125 CUP PT SKT SET SCREW SS	2
35	95.10309.0	3/8 HIGH COLLAR LOCK WASHER, SS	6
36	64.11792.0	DIGITAL SYSTEM POT BRKT ASSEMBLY	1
37	96.00880.0	8-32 X 0.250 PHILLIPS PH MS SS	4
38	96.02022.0	0.375-16 X 1.250 SHCS GR8	2
39	61.06765.2	RS400 SERIES LEVER ARM	1
40	95.24458.0	NEEDLE THRUST WASHER, TRD-4458	2
41	95.04458.0	NEEDLE THRUST BEARING, NTA-4458	1
42	95.11108.0	0.500-13 HEX NUT	6
43	95.10207.0	0.500" SPLIT LW SS	6
44	83.01074.0	2-044 O-RING, NITRILE 70	1
45	95.03587.0	1/4-28 THREAD, GREASE ZERKS	2
46	95.00071.0	SHAFT SEAL CRI 24892	1
47	95.10303.0	#8 INTERNAL TOOTH LW, SS	2

Prices and specifications subject to change without notice.

WESMAR

Dual Cylinder Actuator - Exploded View

RS932/1200 Series with 3.5" Shaft - See Pages 36 & 37 for Parts List.

Like Us On facebook

954-463-4307 • D.S. Hull Company Inc. • www.dshullco.com

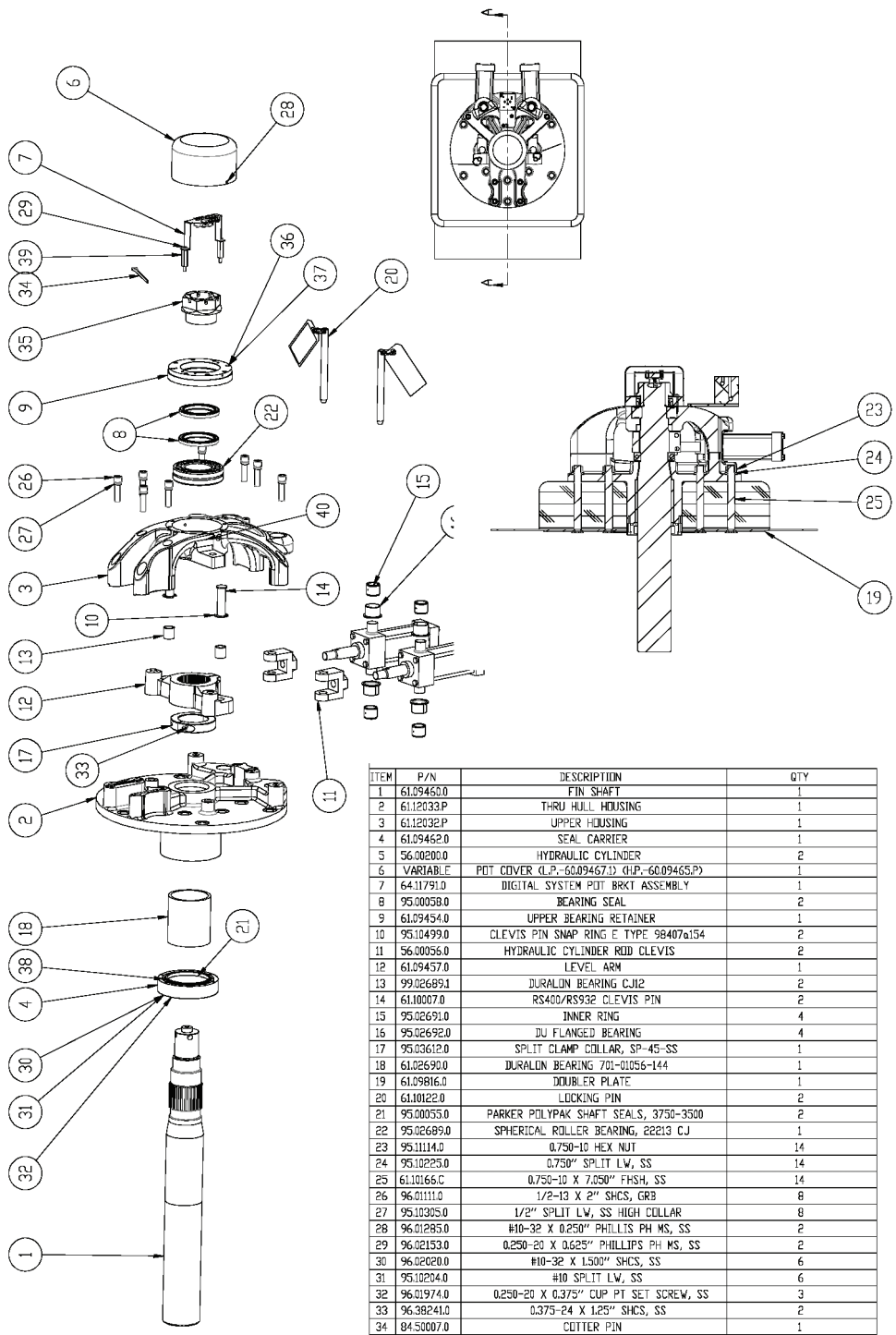

ITEM	P/N	DESCRIPTION	QTY
1	61.09460.0	PIN SHAFT	1
2	61.12033.P	THRU HULL HOUSING	1
3	61.12032.P	UPPER HOUSING	1
4	61.09462.0	SEAL CARRIER	1
5	56.00200.0	HYDRAULIC CYLINDER	2
6	VARIABLE	POT COVER (L.P.-60.09467.1) (H.P.-60.09465.P)	1
7	64.11791.0	DIGITAL SYSTEM POT BRKT ASSEMBLY	1
8	95.00058.0	BEARING SEAL	2
9	61.09454.0	UPPER BEARING RETAINER	1
10	95.10499.0	CLEVIS PIN SNAP RING E TYPE 98407a154	2
11	56.00056.0	HYDRAULIC CYLINDER ROD CLEVIS	2
12	61.09457.0	LEVEL ARM	1
13	99.02689.1	DURALON BEARING CJ12	2
14	61.10007.0	RS400/RS932 CLEVIS PIN	2
15	95.02691.0	INNER RING	4
16	95.02692.0	DU FLANGED BEARING	4
17	95.03612.0	SPLIT CLAMP COLLAR, SP-45-SS	1
18	61.02690.0	DURALON BEARING 701-01056-144	1
19	61.09816.0	DOUBLER PLATE	1
20	61.10122.0	LOCKING PIN	2
21	95.00055.0	PARKER POLYPAK SHAFT SEALS, 3750-3500	2
22	95.02689.0	SPHERICAL ROLLER BEARING, 22213 CJ	1
23	95.11114.0	0.750-10 HEX NUT	14
24	95.10225.0	0.750" SPLIT LW, SS	14
25	61.10166.C	0.750-10 X 7.050" FHSH, SS	14
26	96.01111.0	1/2-13 X 2" SHCS, GR8	8
27	95.10305.0	1/2" SPLIT LW, SS HIGH COLLAR	8
28	96.01285.0	#10-32 X 0.250" PHILLIS PH MS, SS	2
29	96.02153.0	0.250-20 X 0.625" PHILLIPS PH MS, SS	2
30	96.02020.0	#10-32 X 1.500" SHCS, SS	6
31	95.10204.0	#10 SPLIT LW, SS	6
32	96.01974.0	0.250-20 X 0.375" CUP PT SET SCREW, SS	3
33	96.38241.0	0.375-24 X 1.25" SHCS, SS	2
34	84.50007.0	COTTER PIN	1
35	61.09463.0	CASTLE NUT	1
36	95.02028.0	0.25-20 X 1.250" SHCS, SS	8
37	95.10311.0	0.25" HIGH COLLAR LW, SS	8
38	83.02349.0	2-157 O-RING, NITRILE 70	1
39	95.10306.0	0.250"-20 INTERNAL TOOTH LW, SS	2
40	95.03587.0	ZERK GREASE FITTING	2

Like Us On facebook

1-800-437-1002 • D.S. Hull Company, inc. • www.dshullco.com

Wesmar Bow Thrusters

WESMAR Vortex Thruster Parts

Order No.	WESMAR No.	Description	List
		Controls	
257445	64.10662.1	Hydraulic Main Control W/IC Box	$1575.00
257456	64.10660.0	Hydraulic Dual Main Bow/Stern Control with IC Box	$2000.00
257401	64.10661.0	DC Pro Main Joy Stick Control W/IC Box	$1,250.00
257412	64.10662.0	DC Pro/Hyd. Secondary Joy Stick Control	$750.00
257423	64.10663.0	DC Pro Bow & Stern Control W/IC Box	$1750.00
257434	64-10660.1	DC Pro/Hyd. Secondary Bow & Stern Control	$1000.00
257370	64.10013.0	20 mm Joystick Control (One Thruster) On/Off/On	$250.00
257381	64.10014.0	Bow & Stern Thruster Control On/Off/On	$325.00
256013	64.07285.0	Standard Bow Thruster Rotary Control (On/Off/On)	$160.00
256019	64.00007.0	Joy stick Thruster Control with BOW Plate (On/Off/On)	$200.00
		Solenoids & Thermal Switches	
256028	64.00035.0	Normally (Open Thermal Switch (for 24V 13 HP Systems)	$100.00
256125	64.00030.0	Normally (Closed Thermal Switch (for 12V 5 HP System)	$100.00
257300	53.24059.0	12V Thruster Solenoid (New Style for 5 HP)	$155.00
256052	53.08625.0	12V Thruster Solenoid (for 5 HP) White Rodgers	$145.00
257523	49.00080.0	DC Contactor SW 80 Albright (For 23 HP Dc Pro)	$150.00
256063	49.02011.0	24V Thruster Solenoid (for 13 HP)	$270.00
		Motors	
256030	64.08556.0	12V 5 HP Thruster Motor (6” & 8” Thrusters)	$995.00
256041	64.08209.0	24V 13 HP Thruster Motor (8”, 10” & 12” Thrusters)	$1875.00
256998	64.23048.0	DC Pro 12 to 23 HP Upgrade with Control	$6995.00
		Props	
907382	16.00008.1	7.75” x 8” LH Kaplan Prop for Vortex Models	$550.00
907381	16.00008.0	7.75” x 8” RH Kaplan Prop for Vortex Models	$550.00
S/O	61.08847.0	8 in. Dia. X 8 in. L/H Prop for DPC Model	$500.00
S/O	61.08848.0	8 in. Dia. X 8 in. R/H Prop for DPC Model	$500.00
256567	16.00010.0	9.75 in. Dia. X 12 in. R/H Prop for Vortex Model	$750.00
256578	10.00010.1	9.75 in. Dia. X 12 in. L/H Prop for Vortex Model	$750.00
256033 S/O	61.0206.0	10 in. Dia. X 12 in. L/H Prop for DPC Model	$750.00
256034 S/O	61.0205.0	10 in. Dia. X 12 in. R/H Prop for DPC Model	$750.00
256097	61.08667.0	12.25 in. Dia. X 12 in.L/H Prop for Vortex & DPC Models	$750.00
256110	16.00012.0	12.25 in. Dia. X 12 in. R/H Prop for Vortex & DPC Models	$750.00
		Bow & Stern Tunnels	
256625	20.08625.0-3ft	8 in. X 3 ft. Fiberglass Thruster Tube	$375.00
256556	20.08625.0	8 in. X 4 ft. Fiberglass Thruster Tube	$500.00
256636	20.08625-0-5ft	8 in. X 5 ft. Fiberglass Thruster Tube	$625.00
256545	20.01075.0	10 in. X 5 ft. Fiberglass Thruster Tube	$1,375.00
256139	02.00150.0-4FT	12.75 in. X 4 ft. Fiberglass Thruster Tube	$1,200.00
256147	02.00150.0-5FT	12.75 in. X 5 ft. Fiberglass Thruster Tube	$1,800.00
256155	02.00150.0-6FT	12.75 in. X 6 ft. Fiberglass Thruster Tube	$2,160.00
256345	02.00250.0-6ft	16 in. X 6 ft. Fiberglass Thruster Tube	$2,400.00
916687 S/O	64.11147.0	Stern Thruster Tube Assembly V2-7M	$700.00
915756 S/O	64.11117.0	Stern Thruster Tube Assembly V2-10M	$750.00
908516 S/O	64.11321.0	12” Stern Tube Assembly	$950.00
		Couplings	
256263	95.03501.0	5/8 in. Love Joy Coupling Motor side	$50.00
256270	95.03503.0	Love Joy Rubber Spider L100	$30.00
256693	61.09546.0	DPC8-10 Motor Side Coupling	$115.00
256704	61.09872.0	DPC8-10 Thruster Input Coupling	$250.00
256737	95.03585.0	DPC8-10 Coupler Spider Insert L75	$25.00
256759	95.31875.0	Reuland Input Coupling (V10/12) RC3-0875-187 Big Blue 48V	$100.00
256772	95.00305.0	Reuland Coupling Insert (V10/12) RG3H5	$40.00
256761	95.03509.0	Reuland Motor Coupling (V10/12) (V2-12) RC3-0625-187 24V Motor	$100.00
257589	95.31316.C	Reuland Spline Coupling (V2-12 Input)	$200.00
		Gaskets	
257478	79.08558.0	V2-12 Saddle/Tube Gasket	$25.00
257489	79.08557.0	V2-12 Drive/Saddle Gasket	$25.00
257799	79.100072.0	V2-16/18/20 Saddle/Drive Gasket	$50.00

Bow Joy Stick Control On/Off 257370

Bow & Stern Control On/Off 257381

Rotary Control On/Off 256013

DC Pro Master Bow Joy Stick Control Proportional 257401

DC Pro Master Bow & Stern Control Proportional 257423

Joy stick Thruster Control with BOW Plate On/Off 256019

Prices and specifications subject to change without notice.

WESMAR Vortex Thruster Parts (Continued)

Order No.	WESMAR No.	Description	List
		Shaft Seals & O-Rings	
257578	95.00033.0	Input Shaft Seal 9415-LPD (V2-12 & DPC50)	$30.00
256605	95.00034.0	Output Shaft Oil Seal (for 10/12” Thruster) 9859-LUP	$30.00
257501	95.00075.0	V2-16/18 Input Shaft Seal 5389-LVP V2-16/20 & V2-20 Output	$30.00
256614	95.00053.0	Output Shaft Oil Seal (for 16” Thruster) 9848-LUP	$25.00
257798	83.01019.0	V2-12 Motor Adapter O-Ring	$4.00
257786	83.01015.0	V2-16 Input Shaft O-Ring	$5.00
257785	83.01010.0	Output Seal Carrier O-Ring (V2-12, V2-16)	$5.00
257780	83.01023.0	V2-12 Bearing Carrier O-Ring	$4.00
257784	83.01002.0	V2-16 Bearing Barrier O-Ring	$4.00
		Shim Kits	
257806	12.01310.0	Output Shaft Shim Kit, V2-7M/8M/10M	$65.00
257807	12.01311.0	Output Shaft Shim Kit, V2-10/12	$70.00
257808	12.01312.0	Output Shaft Shim Kit, V2-16	$70.00
257809	12.01314.0	Output Shaft Shim Kit V2-20	$75.00
257810	12.01331.0	Shim Kit, Motor Adapter, V2-10/12/16	$40.00
257811	12.01334.0	Shim Kit, Motor Adapter, V2-18/20	$40.00
		Miscellaneous	
257490	61.10103.0	V2-12 Propeller Key .25 Sq. x 2.13	$25.00
257781	61.07194.0	V2-16 Prop Key	$25.00
257512	56.99930.0	SFT30 Filter Element Hydraulic High Pressure	$150.00
256255	12.00071.0	5 oz. Thruster Oil Reservoir	$70.00

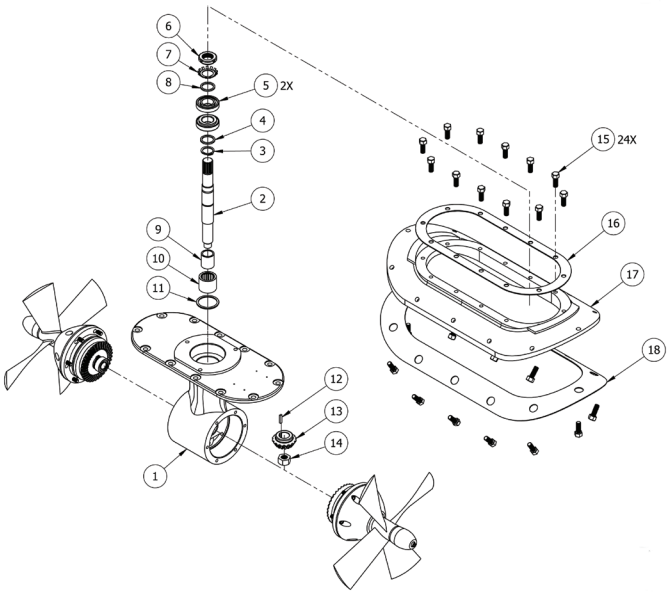

DC Pro 12 to 23 HP Upgrade with Control

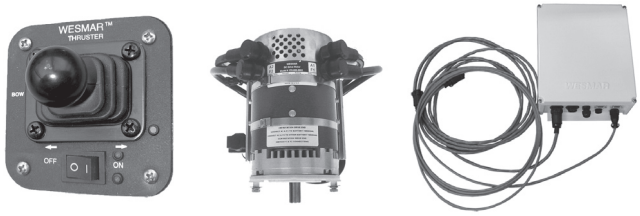

Order no.	Mfg. no.	List
256998	64.23048.0	$6,995.00

Zinc with Bronze Prop Nut Insert
Comes with washers attached.
Zinc with Bronze Nut Insert

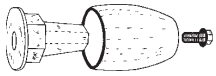

(Type B 6” - 12”
(Type C 16” - 22”)

Order no.	Mfg. no.	Shaft	Zinc	Thread	List
256014	B-Comp.	7/8”	1-5/8”	5/8”-11	$60.00
256036	C-Comp.	1”	2”	3/4”-10	$70.00

Zinc with Stainless Steel Prop Nut Assembly

Order no.	Mfg. no.	Shaft	Zinc	Thread	List
257613	64.08148.0	7/8”	1-5/8”	5/8”-11	$85.00
257624	64.08192.0	1”	2”	3/4”-10	$140.00

Zinc Only - No Nut Insert

Order no.	Mfg. no.	Size	List
101784	B-REPL.	5/8”	$9.99
101785	C-REPL	3/4”	$14.99

Example Drawing
V2-12 Exploded View

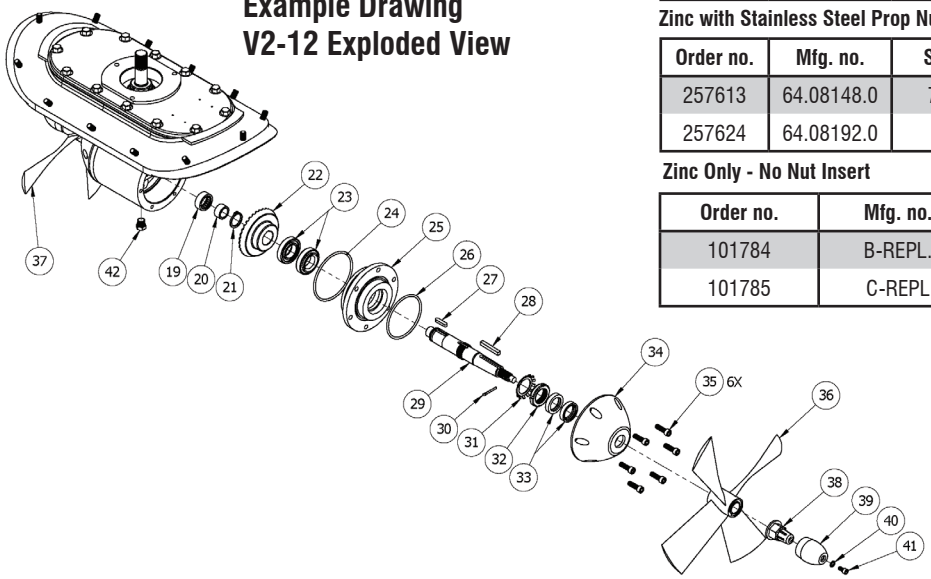

Like Us On facebook

954-463-4307 • D.S. Hull Company, Inc. • www.dshullco.com

WESMAR Roll Fin Stabilizer Parts

Order No.	WESMAR No.	Description	List
		Fin & Shaft Assemblies	
903969	62.10057.0	3.5 ft. Fin and Shaft Assembly	$2750.00
256007	62.06871.0	4.5 ft. Stabilizer Fin Assembly	$3,995.00
256008	62.06872.0	6 ft. Stabilizer Fin Assembly	$4,925.00
907545	62.10130.0	7.5 ft. Stabilizer Fin Assembly	$5,250.00
256009	62.06873.0	9 ft. Stabilizer Fin Assembly	$5,575.00
		Reinforcement Blocks	
903259	99.02500.0	Hull Reinforcing Blocks (Low Profile)	$1,000.00
256015	WOODBLOCK	Hull Reinforcing Blocks 18” x 18” (For Single Cylinder Systems)	$1,325.00
904420	99.01200.0	Hull Blocks 24” x 24” (For Dual Cylinder Systems)	$2,000.00
904421	64.09815.0	Staniless Steel Stabilizer Doubler Plate (For Dual Cylinder Systems)	$2,975.00
		Seals & Retainers	
256292	61.08504.0	Stabilizer Seal Retainer (Single Cylinder)	$320.00
256275	95.00052.0	Stabilizer Shaft Seal (2 per side) 2.5” Shaft	$100.00
256990	83.01074.0	Seal Carrier O-ring 2.5” Shaft	$4.80
257768	95.00055.0	3-1/2” Stabilizer Shaft Seal Dual Cylinder	$125.00
257779	83.01157.0	3-1/2” Shaft Seal O-ring Dual Cylinder	$5.00
257802	12.01200.0	RS200 Fin Shaft Seal Kit (2000 - Present)	$210.00
257803	12.01201.0	RS200 Repair Kit Basic (2004 - Present)	$450.00
257804	12.01202.0	RS200 Repair Kit Inclusive (2004 - 2010)	$700.00
257805	12.01203.0	RS200 Repair Kit Inclusive (2011-Present)	$750.00
		Bearings & Races	
257591	95.02639.0	Upper Bearing Race (for RS400-900)	$50.00
257735	95.02638.0	RS400 Upper Pin Bearing	$80.00
257602	95.02641.0	Lower Bearing Race (for RS400-900)	$75.00
257646	95.02640.0	RS400 Lower Bearing	$125.00
257757	95.02572.0	Upper Duralon Bearing for RS 600	$65.00
257657	95.10055.0	Lower Duralon Bearing (Prior to 12/10)	$125.00
257783	99.10055.0	Lower Duralon Bearing (After 12/10)	$60.00
257746	61.10104.0	Lower Duralon Retainer Ring	$40.00
257668	61.09967.1	Thrust Bearing Support	$90.00
257679	95.24458.0	Needle Thrust Washer	$20.00
257680	95.04458.0	Needle Thrust Bearing	$30.00
		Cylinders & Parts	
256805	61.06765.2	Stabilizer Torque Arm	$295.00
257369	64.00400.0	2.5 In. Bore Cylinder	$975.00
256173	64.00469.0	Cylinder w/Clevis 2” Bore	$1,250.00
257790	12.00200.1	2” Bore Cylinder Seal Kit	$40.00
256816	12.00200.0	Stabilizer Cylinder Seal Kit 2.5” Bore	$80.00
257390	56.00056.0	Cylinder Rod Clevis	$200.00
256971	84.40004.0	Stabilizer Clevis Pin .75 O.D.	$60.00
257782	16.12162.0	Stabilizer X Clevis Pin .78715 O.D.	$64.00
256982	95.10499.0	Stabilizer Clevis Pin E-Clip	$4.00
257793	12.51204.0	Cylinder Seal Kit 2” (Hydro-Line)	$36.00
257794	12.68108.0	Cylinder Rod End Seals 2” (Hydro-Line) These 3 items create 1 kit	$20.00
257795	12.51205.0	End Cap Seal Kit 2” (Hydro-Line)	$36.00
		Cylinder Bushings & Adapters	
256926	61.10214.0	Trunnion Mount-Du Flange Adapter	$100.00
256937	95.02672.0	Trunnion Mount-Du Flange Bushing	$25.00
256948	61.10215.0	Lever Arm-Du Flange Adapter	$25.00
256959	95.02717.0	Lever Arm-Du Flange Bushing	$10.00
257788	95.02691.0	Trunion Race for RS932	$40.00
257789	95.02692.0	Flanged Trunion Bearing RS932	$25.00
257796	99.02689.1	Lever Arm Duralon Bearing (RS932)	$20.00
		Hydraulic Pump, Filters & Manifold Components	
256207	56.00402.0	Stabilizer Oil Filter (Pall, old)	$225.00
256468	56.06721.0	Stabilizer Oil Filter (Schroeder) NN-Z-10)	$150.00
257000	56.12100.0	Stabillizer Oil Filter (2.5” x 1”)	$125.00
257512	56.99930.0	SFT30 Filter Element Hyd. Hi Pressure)	$150.00
256190	56.00401.0	5 GPM Hydraulic Gear Pump Vickers V-10	$1,295.00
256894	12.00010.0	Stabilizer Dual Pump Parts Kit	$500.00
257534	56.00006.3	Hydraulic Dump Valve w/o Coil (SV3-10) New Style	$150.00
256827	56.00006.0	12V Stabilizer Dump Valve	$300.00
256783	56.00006.1	12V Dump Valve Coil	$75.00
257358	56.00006.2	24 VDC Dump Valve Coil	$75.00
256794	56.00010.0	Relief Valve Cartridge Pressure Adjustment	$150.00
257545	56.00077.0	Pressure Reducing Valve (PRV-10) New Style	$130.00

Like Us On facebook

1-800-437-1002 • D.S. Hull Company, inc. • www.dshullco.com

WESMAR Roll Fin Stabilizer Parts (Continued)

Order No.	WESMAR No.	Description	List
		Potentiometer	
256156	49.00018.0	5K Fin Control PotentiometerCPS1000	$50.00
904312	64.10327.0	Vosper Pot Adapter Kit CPS1000	$300.00
256883	64.06917.0	Potentiometer & Bracket Assembly CPS1000	$140.00
257691	84.20010.0	250 x .875 Dowel Pin (Stabilizer Pot)	$4.00
257724	64.48932.1	DSP Pot Bracket Assembly (Single Cylinder)	$250.00
257702	64.48932.0	DSP Pot Bracket Assembly Magnetic (Dual Cylinder)	$250.00
257713	64.11793.0	Digital Magnet Assembly DSP	$55.00
		Proportional Valve & Coils & Driver Card	
256849	56-00411.0	Vickers Proportional Valve 12V	$1,075.00
256224	64.08283.0	Cushion Valve Assembly	$525.00
256903	41.13457.0	24V Stabilizer Valve Coil (Vickers)	$120.00
256915	41.13458.0	12V Stabilizer Valve Coil (Vickers)	$75.00
256989	41.06244.0	24V Stabilizer Valve Coil (Rexroth)	$60.00
256861	41.04124.0	12V Stabilizer Valve Coil (Rexroth)	$60.00
256850	74.09011.0	Gyro Stabilizer Valve Driver Card CPS1000 12 Volt	$2,100.00
		Controls	
257800	12.05000.1	DSP5000 Upgrade from 4800	$13,500.00
257801	12.05000.6	DSP5000 Upgrade Parts Kit From CPS1000 (With 257800)	$1,500.00
257635	64.12046.0	DSP4800 Remote Station (New Install)	$1,000.00
256459	64.09223.0	Reverse Lockout Switch Mechanical	$300.00
		Miscellaneous Parts	
256960	96.02027.0	3/8-16 X 3.5 GR8 Machine Screw (Allen Head) Upper to Lower Actuator	$5.00
257797	95.10309.0	3/8" Hi-Collar Split Washer Use with256960	$4.00
257787	95.10207.0	1/2" Split Lock Washer	$1.00
256872	96.02026.0	1/2-13 X 7.5 in. S/S FH Bolt (slotted) Hull Blocks/Lower Actuator	$35.00
S/O	56.06722.0	Stabilizer Oil Tank Breather	$50.00
257467	61.10646.0	Stabilizer Kelp Cutters	$250.00

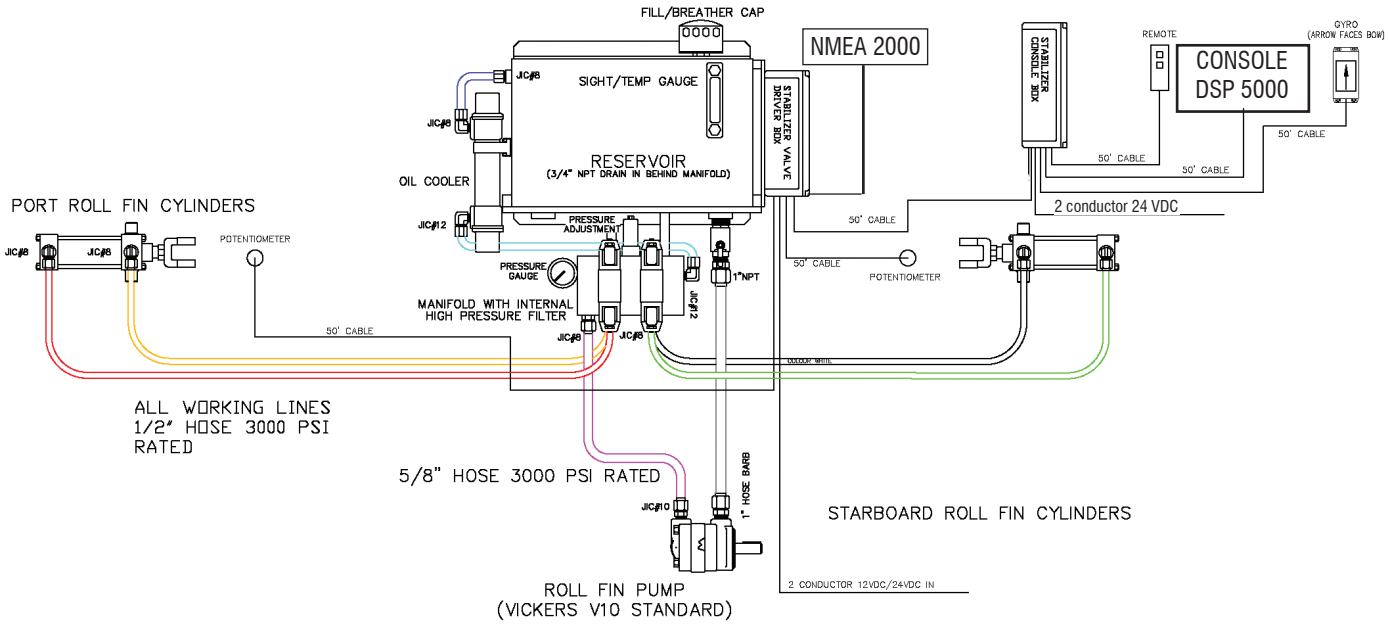

Like Us On facebook

954-463-4307 • D.S. Hull Company Inc. • www.dshullco.com

Like Us On facebook

1-800-437-1002 • D.S. Hull Company, inc. • www.dshullco.com

WESMAR APU System
Easy to engage right from the helm. Leave worries about engine failure to the WESMAR APU System.

WESMAR's Auxiliary Propulsion Units come in two sizes: the APU Model 300 and the APU Model 200. They offer instant, reliable alternative source of power with minimual maintenance.

Powered by your vessel's generator or stand-alone engine the APU allows fuel efficient, continuous operation, giving the ability to bring the boat to port in the event of mechanical failure, and the ability to quietly cruise without the use of the main engine. Simplicity and practicality are the focus of this "get-home: system.

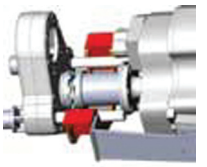

In Standby

The compact, rugged design of the APU ensures reliability with robust, corrosion-resistant operation. And, as with all WESMAR products, the APU is built of the most durable materials and powder coated to ensure a long life.

Engaged and ready for operation

System features:
- Provides continuous propulsion in the event of a main engine failure.
- Low shift RPM for trolling, maneuvering, and sight-seeing.
- Quiet operation for late night and early morning departures resulting in minimal disturbances to guests and neighbors.
- Quiet trolling speeds for fishing.
- The APU can be a dedicated hydraulic unit, and also fits perfectly with WESMAR's other hydraulically driven products, which are uniquely designed to improve comfort and control for boaters around the world.
- Operates with a helm-mounted safety key lock.

Helm Control

APU Model 300
- Maximum HP Rating: 100/75kW
- Maximum Propeller Shaft Diameter: 3.38 inches/85.85mm

APU Model 200
- Maximum HP Rating" 25 HP/19kW
- Maximum Propeller Shaft Diameter: 2.38 inches/60.45mm

Complete control from the helm using state-of-the-art electronics. The WESMAR APU systems can be operated right from the bridge by simply turning the key and using the proportional joystick for forward and aft propulsion. Once the system is engaged with the key lock at the helm, it is activated and you are immediately in control and underway. No need to visit the engine room at all.

What our Customers say...
"Thanks to the WESMAR APU we got home safely"

The beauty of WESMAR's new APU is that it can be operated right from the bridge by simply turning the key and using the proportional joystick for forward and aft propulsion.

"The WESMAR APU kept us off the rocks and got us home safely in opposing wind and current," said Captain Brian Calvert, on an around-the-world-cruise, who periodically reports his pleasure with the WESMAR roducts on board his Selene48 Ocean Trawler. First he reported: "When the impeller failed on the engine, the APU performed flawlessly. I ran it for two hours and maintained 4 knots. It is always a reassurance to know I have it if I need it."

Our technical team specialist in China, David Yen, reported an impressive 4.5 knot speed during sea trials of the WESMAR APU system on a 60-foot Queenship Trawler. Yen reported that using a hydraulic pump powered by a 20kW Genset, the APU achieved the boat speed of 4.5 knots. The boat, was delivered to the West Coast of the U.S. to its new owner. "The installation was uncomplicated" said Yen, "the APU only involved an additional valve on the Central Hydraulics.

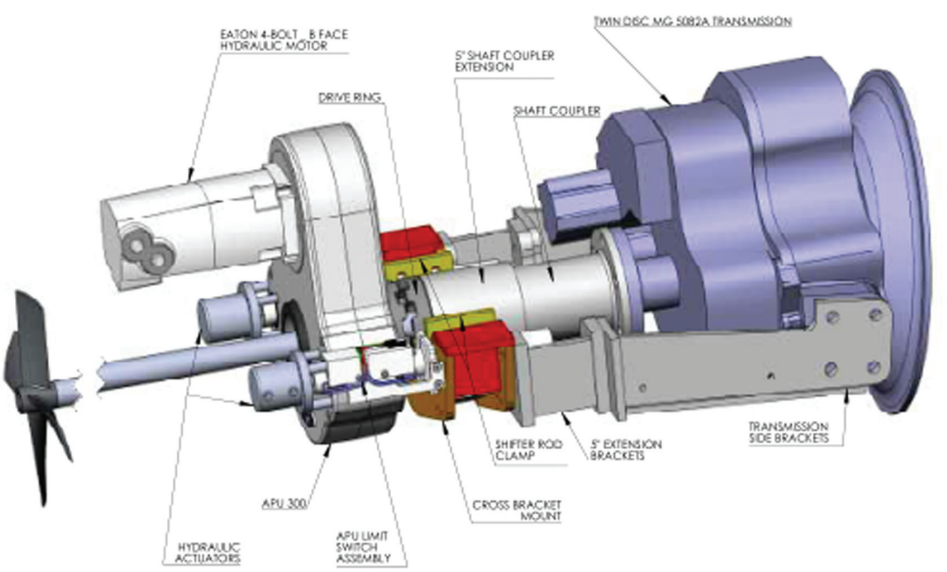

Transmission Mount

APU attached to transmission

Simulated boat propellor and propellor shaft

Prices and specifications subject to change without notice.